US005659391A

United States Patent [19]

Carrieri

[11] Patent Number: 5,659,391

[45] Date of Patent: Aug. 19, 1997

[54] **EARTH MONITORING SATELLITE SYSTEM WITH COMBINED INFRARED INTERFEROMETRY AND PHOTOPOLARIMETRY FOR CHEMICAL AND BIOLOGICAL SENSING**

[75] Inventor: **Arthur H. Carrieri**, Abingdon, Md.

[73] Assignee: **The United States of America as represented by the Secretary of the Army**, Washington, D.C.

[21] Appl. No.: **592,257**

[22] Filed: **Jan. 26, 1996**

[51] **Int. Cl.**[6] **G01B 9/02**

[52] **U.S. Cl.** **356/351**; 356/346

[58] **Field of Search** 356/345, 358, 356/359, 360, 351, 349

[56] **References Cited**

U.S. PATENT DOCUMENTS

4,884,886 12/1989 Salzman et al. .
5,208,651 5/1993 Buican .

OTHER PUBLICATIONS

Buican, Tudor N., "Real-Time Fourier Transform Spectrometry for Flourescence Imaging and Flow Cytometry", SPIE vol. 1205 Bioimaging and Two-Dimensional Spectroscopy (1990) (no month available).

Primary Examiner—Frank G. Font
Assistant Examiner—Robert Kim
Attorney, Agent, or Firm—Ulysses John Biffoni

[57] **ABSTRACT**

Apparatus for producing interferograms on array of light detectors is described in which light from a field of view is gathered by a concave Newtonian mirror, collimated by a Schwarzchild objective and directed along a first optical path having PEM's modulated so as to act like an interferometer between a pair of linear polarizers and a lens for imaging light passing through said polarizers onto the array. Scattergrams are produced on the array by a laser in a second optical path that includes a linear polarizer, a modulated PEM for producing light that is polarization modulated, optical elements for directing the circularly polarized light into the field of view of the Newtonian mirror, a modulator for causing the PEM's in the first optical path to elliptically polarize light and a device for extracting the first linear polarizer in the first optical path from that path. The distance between the apparatus and an area under examination is determined by turning on the laser, sinusoidally modulating the PEM in the second optical path, detecting the light modulated by that PEM so as to produce a first sinusoidal voltage, removing modulation from the PEM's in the first optical path and determining the phase difference of a second sinusoidal voltage produced by one light detector of the array and the first sinusoidal voltage.

12 Claims, 2 Drawing Sheets

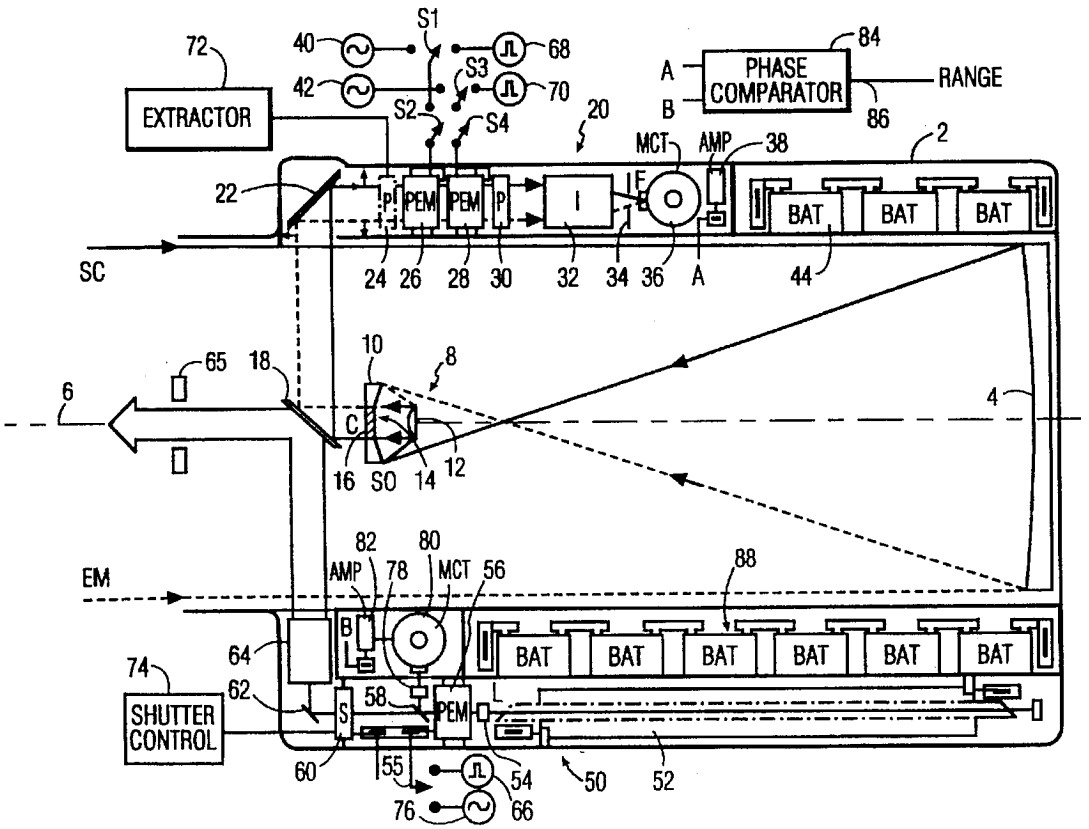

ClibPDF - www.fastio.com

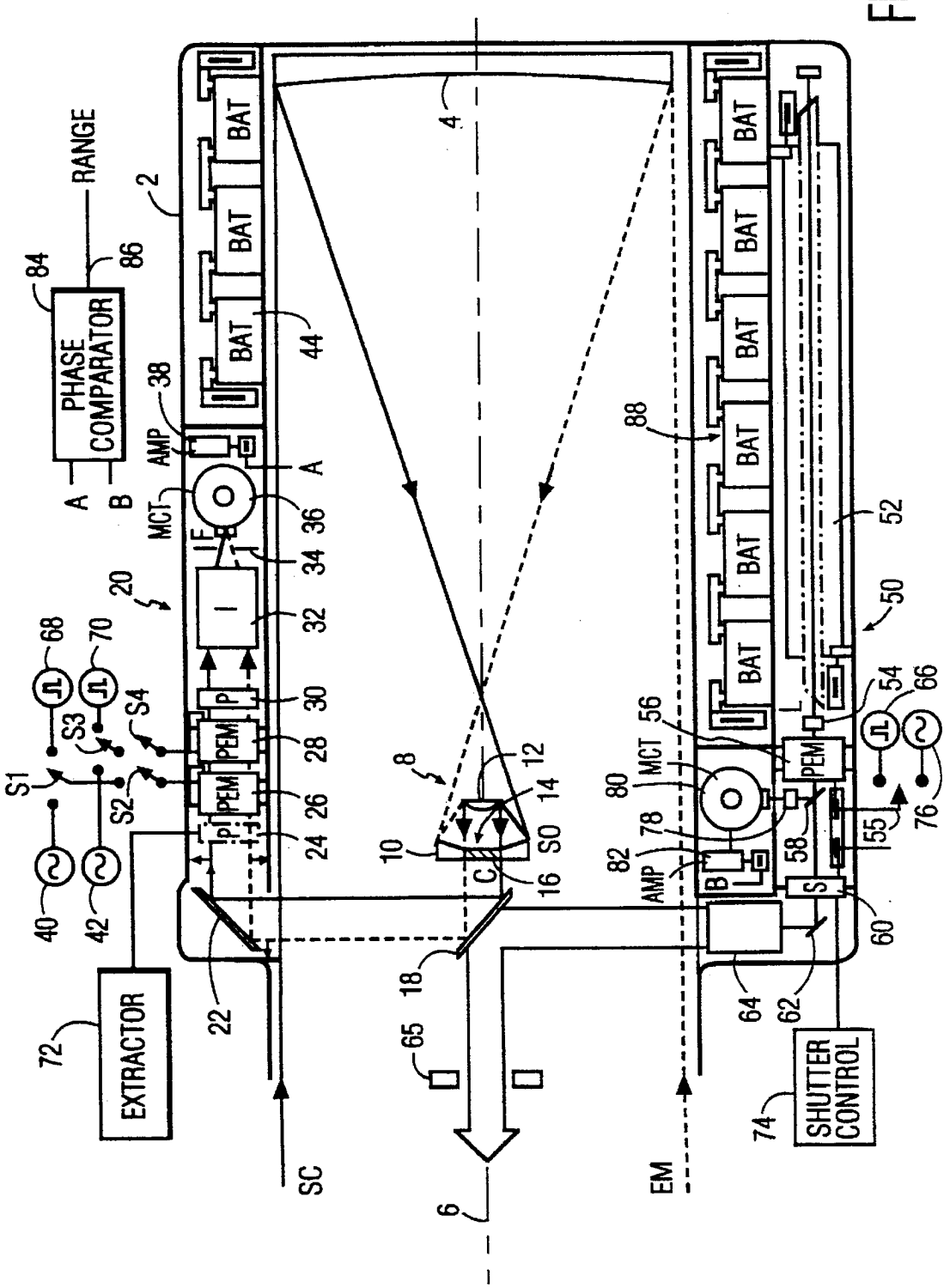

FIG. 1

ClibPDF - www.fastio.com

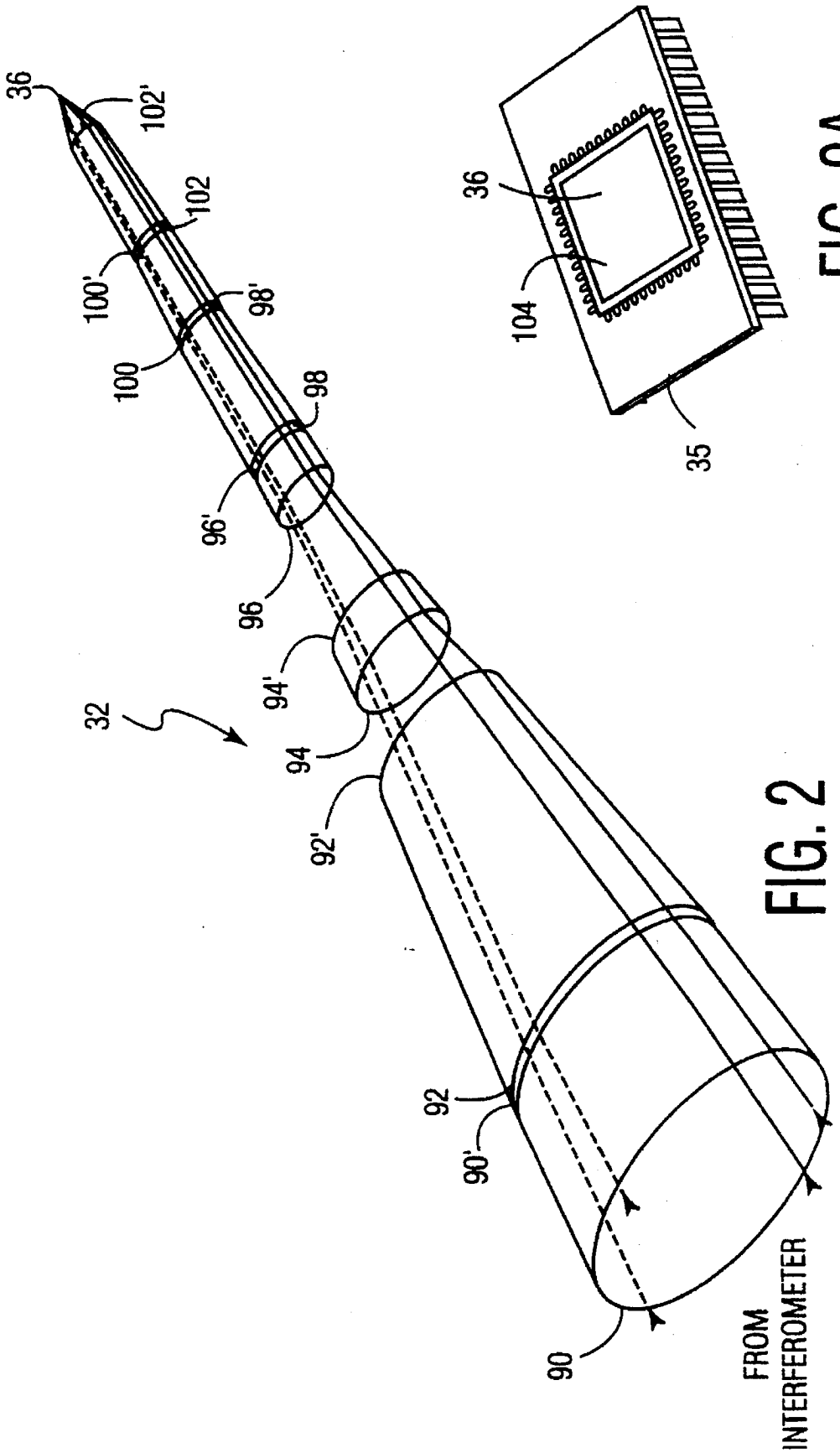

FIG. 2

FIG. 2A

ClibPDF - www.fastio.com

EARTH MONITORING SATELLITE SYSTEM WITH COMBINED INFRARED INTERFEROMETRY AND PHOTOPOLARIMETRY FOR CHEMICAL AND BIOLOGICAL SENSING

GOVERNMENTAL INTEREST

The invention described herein may be manufactured, used and licensed by or for the U.S. Government.

BACKGROUND OF THE INVENTION

Chemical contaminants have been detected by deriving the spectra of light emitted from them. As described in an article entitled "Bioimaging and Two-Dimensional Spectroscopy" published in 1990 in the Proceedings of the International Society for Optical Engineering, the spectra of fluorescence emanating from an area is derived by passing it through an interferometer that is tuned to reinforce different frequencies in the range of interest. Light passing through the interferometer is imaged onto an array of n×n light detectors where n is a pixel element of the detector. Each pixel element of the detector projects to an area in the field-of-view (FOV) of the measuring instrument (object space). Each pixel measures an interferogram that contains all radiation frequencies from the irradiating object within its projected object space. The electrical signals produced by the interferogram for all frequencies in the detection bandwidth are then subjected to analysis to identify the substances producing the fluorescence. The analysis involves the application of a fast Fourier transform (FFT) and several filtering operations to develop a pattern that is matched with the pattern of a known substance by a fully trained neural network. Although a Michelson interferometer could be used, the interferometer described in the article is comprised of two linear polarizers separated by birefringent crystals that can be respectively modulated or tuned by application of voltage waves. The crystals are called photoelastic modulators, PEM's. For proper operation of an interferometer, light from the emitting area being analyzed by the interferometer must be collimated to a narrow acceptance angle, or below that angle, of it's birefringement crystal. The system just described is referred to as being passive.

Analysis of an area to identify biological particles such as bacteria and viruses has been accomplished by an active system in which monochromatic polarization-modulated light, from a laser, is back-scattered by the particles and imaged onto a detector array. The light back-scattered by the biological particles is examined in the form of a Mueller matrix whose elements describe all polarization states of the back-scattered light at each pixel of the detector array. The Mueller matrix instrument is comprised of a linear polarizer and a modulated PEM positioned in the transmitted beam, a plurality of modulated PEM's and another linear polarizer positioned in the received beam. This combination of optical elements is referred to as a Mueller matrix spectrometer, MMS, and is described in an article entitled "Mid Infrared polarized Light Scattering" that was published in 1992 in the National Technical Information Series, catalog number AD-A247-359/3. Light from the last polarizer in the received back-scattered beam is imaged onto an n×n array of light detectors so as to produce n squared scattergrams, one per pixel in the detector array. The scattergram is processed and transformed into the Mueller elements, filtered and distributed to a neural network trained to pattern match each biological compound to its Mueller matrix characteristic.

SUMMARY OF THE INVENTION

The systems described above for identifying chemical and biological contaminants are entirely separate and both require their own optical means for viewing an area being inspected so that their combined weight would present a significant problem to the designer of a satellite.

In accordance with this invention, the passive operation used for identifying chemical contaminants and the active operation for identifying biological contaminants are largely carried out by the same optical components so as to reduce cost as well as weight.

The optical system of the invention is comprised of a primary mirror of a Newtonian telescope for gathering light from the object area of interest and directing it to an annular spherical primary mirror of a Schwarzchild objective (SO) that in turn reflects that light to a secondary spherical mirror of the SO. Light reflected by the secondary SO mirror passes through a correcting lens located inside the center bore of the SO primary mirror. A double sided flat mirror is located after the primary SO mirror and mounted 45 degrees transversely to the axis of the primary Newtonian telescope mirror. A double sided mirror is mounted transversely of the axis of the primary reflecting mirror of the Newtonian telescope.

When operating in the passive mode, so as to identify chemical contaminants, light is gathered from the object area of interest by the primary mirror of the Newtonian telescope and passed through the Schwarzchild objective and the correction lens to one side of the double sided mirror that directs it to a first optical path including an interferometer comprised of a plurality of PEM's mounted between a pair of linear polarizers. Light from the interferometer is focused onto an array of light detectors so as to produce n–n interferograms, where n squared is the number of pixel elements in the detector array. The PEM's are modulated by voltage waves of different frequencies, and pass the central portion of the infrared radiation band ranging from 700–1400wavenumbers (cm −1 power). The PEM's are modulated by voltage waves, preferably sinusoidal waves of different frequencies, so as to pass the central portion of the infrared band.

When operating in the active mode, light from a laser is successively passed in a second optical path including a third linear polarizer, a single PEM modulated so as to act as a source of polarization modulation in the outgoing beam, and a beam expansion lens configuration for narrowing the divergence of the outgoing beam directed to the scattering area of interest.

Biological particles in the area are identified by their Mueller matrix in the backscattering direction: a response to stimulation by the polarization-modulated light from the laser. To determine the solid angles subtended by pixels of the detector array and the object irradiated area of interest, the scattered light is gathered by the primary mirror of the Newtonian telescope and passed via the primary and secondary mirrors of the Schwarzchild objective and the correction lens to the side of the double sided mirror that directs it into the first optical path. In this mode, however, the first linear polarizer of the interferometer is removed from the first path, and the PEM's therein are modulated so as to function as elliptical polarizers and form a Mueller matrix spectrometer. The light is imaged onto the array of light detectors forming n (squared) independent scattergrams that are analyzed to identify the bacterial contaminants present in the irradiated area referred to.

Thus, the primary mirror of the Newtonian telescope, the Schwarzchild objective, the correction lens, the double sided

ClibPDF - www.fastio.com

mirror and all but one of the elements in the first optical path, the first linear polarizer, function in both the passive and active modes of operation.

A further aspect of this invention is the provision of means for determining the distance between the satellite or other carrier and the imaged area of the object scene. Briefly, it operates by sinusoidally modulating the PEM in the path of the laser light, terminating the modulation of the PEM's in the first optical path and comparing the phase of the modulation with the phase of the sinusoidal modulation detected at one pixel of the array.

BRIEF DESCRIPTION OF THE DRAWINGS

FIG. **1** is an axial cross section of a satellite of this invention;

FIG. **2** illustrates a multi-element lens for imaging light passing through an interferometer onto an array of light detectors; and.

FIG. 2A illustrates an array of light detectors.

DETAILED DESCRIPTION OF THE INVENTION

The components of the satellite are contained within a barrel **2** that may be in the form of a cylinder. A primary mirror **4** of a Newtonian telescope is mounted in one end of the barrel **2** so as to gather light approaching it along its axis **6**. A Schwarzchild objective **8** is centered on the axis **6**. Light gathered by the mirror **4** is directed thereby to a spherical annular primary mirror **10** of the Schwarzchild objective **8**, and a secondary mirror **12** of the objective is positioned to receive light from the primary mirror **10** and direct it through the center **14** of the annular primary mirror **10**. A correction lens **16** located in the center **14** of the primary mirror **10** operates with the curvatures of the mirrors **10** and **12** to collimate light passing through it. One side of a mirror **18** directs collimated light passing through the correction lens **16** into a first optical path **20** including a mirror **22** that reflects light from the mirror **18** parallel to the axis **6**. Also included in the first optical path **20** is an interferometer comprised of a first linear polarizer **24**, PEM's **26** and **28**, a second linear polarizer **30** and a lens system **32** shown in detail in FIG. **2**. for focussing the light through an iris **34** onto an array **36** of light detectors that are respectively located at the pixels of the image. Each of the light detectors in the array **36** are connected to a separate amplifier, but only one amplifier **38** is shown having an output A.

The components thus far described operate in a passive mode and preferably in the mid infrared range so as to identify chemical contaminants in the following manner. Sources **40** and **42** of sine wave voltages of different frequencies such as 32 KHz and 34 KHz are respectively connected via switches S1, S2 and switches S3, S4 to the PEM's **26** and **28**. Electrical power for the sources **40** and **42** for the array **36** of light detection and for their respective amplifiers such as **38** is provided by a bank **44** of batteries.

Additional components for operation in an active mode used for identifying biological contaminants are contained in a second optical path generally indicated at **50**. Light from a laser **52** passes through a third linear polarizer **54**, a PEM **56**, a high transmission beam splitter (less than 1% reflective) **58**, and, when open, a shutter **60** so as to fall on a mirror **62** that directs it perpendicularly to the axis **6** via a lens system **64** that expands the laser beam so as to decrease incident beam divergence. The other side of the two sided mirror **18** and an iris **65** directs the expanded beam within the field of view of the Newtonian telescope mirror **4**.

Operation in the active mode also requires that the PEM **56** be modulated with waves from a source **66**, herein shown as being square waves, so that it functions as a polarization modulator. The square waves are conducted to the PEM **56** via a switch **55**. It is also required that the PEM's **26** and **28** be modulated so as to exhibit all linear and elliptical polarizations by application of voltage waves, herein shown as being square waves of different frequency, from sources **68** and **70** via switches S_1, S_2 and S_3, S_4, respectively. It is important that no combinations of the modulation frequencies for the PEM's **26**, **28** and **56** be the same. A further requirement is that means **72** be provided for extracting the first linear polarizer **24** from the first optical path **20** and that a shutter control **74** be provided for permitting light to pass from the laser **52** only when the satellite is being used for active operation. The signals provided by the array of **36** of light detectors form a scattergram that is analyzed by means not shown to identify the biological contamination.

In accordance with another aspect of this invention, means are provided for measuring the distance of the satellite from the area being examined. This can only be done when the laser **52** is operative. The switch **55** is operated so as to connect the PEM **56** to a source **76** of sine waves rather than to the source **66** of square waves. The beam splitter **58** reflects less than one percent of the laser light striking it via a neutral density filter **78** to a single light detector **80**. The voltage supplied by the detector **80** is amplified by an amplifier **82** so as to appear at an output B. At the same time the extractor **72** removes the first linear polarizer **24** from the first optical path **20** and removes modulation voltage from the PEM's **26** and **28** by opening the switches S2 and S4 so that the PEM's **26** and **28** do not modify the light passing through them. Under these conditions a sine wave of voltage will be produced at the output A. A phase comparater **84** having inputs respectively connected to the outputs A and B provides a signal at its output **86** indicative of the distance between the satellite and the area being examined. A bank **88** of batteries supplies power for the laser **52**, the voltage sources **66**, **76** the light detector **80** and the amplifier **82**. Power for the voltage sources **68** and **70** could be supplied from the batteries of the bank **44**.

Although this invention has been described in connection with a satellite the components thereof could be used in a different vehicle or at a fixed position.

From the foregoing description it is apparent that the polarizers **24** and **30** and the PEM's **26** and **28** constitute means adapted to function as an interferometer or as components of a Mueller matrix spectrometer depending on the modulation of the PEM's and whether or not the linear polarizer **24** is in the first optical path **20** or not.

FIG. **2** illustrates elements of the lens system **32** that images the output of the interferometer **24**, **26**, **28**, **30** onto the array **36** of light detectors mounted on a chip carrier **35** (see FIG. 2A). In the following table, specifications for the surfaces **90**, **90**^{1}; **92**, **92**^{1}; **94**, **94**^{1}; **96**, **96**^{1}; **98**, **98**^{1}; **100**, **100**^{1}and **102**, **102**^{1} are given. The image plane **104** of the light detector array **36** is also defined as shown in FIG. 2A. The array **36** has 466 rows and 466 columns of detectors of Hg_{1-x} Col_x Te, MCT that convert light into voltage.

The table also provides design information for the iris **65**, the neutral density filter **78**, the Schwarzchild primary mirror **10**, the Schwarzchild secondary mirror **12**, the front surface of the correction lens **16**, the rear surface of the correction lens **16** and the flat mirror **18**.

ClibPDF - www.fastio.com

TABLE 1

OPTICS

	Surface	Shape	Curvature	Medium	Diameter/ Length	Distance X	Distance Z Z Through Vertex	Pitch (Deg)
65	Iris/ Obscuration	round	0.00000	air	1.0010(O.D.)/ 0.2540(I.D.)	0.0000	0.05000	0
4	Primary Mirror	sphere	−0.10000	air	1.0000	0.0000	6.50000	0
10	Schwarzchild Primary	sphere	0.95492	air	0.2540	0.0000	0.25000	0
12	Schwarzchild Secondary	sphere	2.74164	air	0.05080	0.0000	0.95802	0
16	Correction Lens Front Surface	sphere	0.16351	air	0.05100	0.0000	0.34874	0
616	Correction Lens Back Surface	sphere	0.50041	ZnSe	0.0510	0.0000	0.24365	0
18	Newtonian 45° Mirror Flat	ellipse	0.00000	air	0.1000	0.0000	0.15000	45
22	Mirror	flat	ellipse	air	0.0520	0.7500	0.15000	−45°
90	Imaging Lens Front Surface	sphere	5.96870	air	0.0520	0.7500	0.20000	0
90^1	Imaging Lens Back Surface	sphere	−1.10173	ZnSe	0.0520	0.7500	0.22044	0
92	Imaging Lens Front Surface	sphere	9.36971	air	0.0500	0.7500	0.22044	0
92^1	Imaging Lens Back Surface	sphere	8.65955	ZnSe	0.0500	0.7500	0.25951	0
94	Imaging Lens Front Surface	sphere	−3.24064	air	0.0250	0.7500	0.27041	0
94^1	Imaging Lens Back Surface	sphere	11.63046	ZnSe	0.0250	0.7500	0.27571	0
96	Imaging Lens Front Surface	sphere	−11.61001	air	0.0200	0.7500	0.29237	0
96^1	Imaging Lens Back Surface	sphere	4.22615	ZnSe	0.0200	0.7500	0.29767	0
98	Imaging Lens Front Surface	sphere	5.24775	air	0.0150	0.7500	0.29767	0
98^1	Imaging Lens Back Surface	sphere	−8.83803	ZnSe	0.0150	0.7500	0.31357	0
100	Imaging Lens Front Surface	sphere	−3.68679	air	0.0150	0.7500	0.31357	0
100^1	Imaging Lens Back Surface	sphere	−6.9149.5	ZnSe	0.0150	0.7500	0.32497	0
102	Imaging Lens Front Surface	sphere	3.74194	air	0.0100	0.7500	0.32497	0
102^1	Imaging Lens Back Surface	sphere	−2.78805	ZnSe	0.0100	0.7500	0.33860	0
104	Imaging Lens CCD Array	square	0.00000	air	0.0020	0.7500	0.34989	0

Other design criteria are as follows:

The field of view angle is 0.356 mrad.

The Newtonian primary 4 is spherical.

The Schwarzchild primary mirror **10** and secondary mirror **12** have monocentric radii with spacing d=2 f.

The convex radius of the mirror **12** is $R_2=(\sqrt{5}-1)f$.

The concave radius of the mirror **10** is $R_1=(\sqrt{5}+1)f$.

The distance from R_1 to the focus f is $R_1f=(\sqrt{5}+2)f$.

The clear aperture of the mirror **12** $Y_1=(\sqrt{5}+2)Y_2$, and the obscuration is 0.20.

The correction lens **16** is ZnSe. The curvatures of the correction lens **16** are optimized for best collimation.

The optics of the Schwarzchild objective **10** and **12** produce zero spherical aberration, coma and astigmatism.

The emission ray EM enters the satellite through its pupil, iris **65**, at a subtended half angle of 0.178 radians.

I claim:

1. Apparatus for remotely sensing chemical and biological material comprising:

(a) a housing having an axis;

(b) a concave mirror mounted coaxially with said axis;

(c) an objective on said axis for collimating light received from said concave mirror;

(d) means for directing collimated light passing through said objective along a first optical path;

(e) a first linear polarizer, first and second PEM's and a second linear polarizer mounted in the order named in said first optical path so that when said apparatus is operating in a passive mode said collimated light first passes through said first linear polarizer, then said first and second PEM's, then said second polarizer;

(f) an array of light detectors;

(g) means for imaging light passing through said second linear polarizer onto said array;

(h) means for selectively modulating said first and second PEM's with sine or square waves of voltage;

(i) means for extracting said first linear polarizer from said first optical path;

(j) a laser for directing laser light along a second optical path for operation of said apparatus in an active mode;

ClibPDF - www.fastio.com

(k) means for controlling the emission of said laser light so that it is only emitted from said apparatus when said apparatus is operating in an active mode;

(l) a third polarizer and a third PEM mounted in the order named in said second optical path so that when said apparatus is operated in an active mode said laser light first passes through said third polarizer then said third PEM;

(m) means for directing said laser light passing through said third pEM along said housing axis and out of said apparatus into the field of view; and

(n) means for modulating said third PEM with square waves of voltage so as to cause it to polarization modulate the laser light passing through it;

wherein during passive mode operation an interferogram is produced on said array when said first linear polarizer is in said first optical path and said first and second PEM's are modulated with sine wave voltages and said laser light is not emitted; and

wherein during active mode operation a scattergram is produced on said array when said laser light is emitted from said apparatus and backscattered light from said laser light passes back into said apparatus along said housing axis, said first linear polarizer is extracted from said first optical path and said first and second PEM's are modulated with square waves of voltage.

2. Apparatus as set forth in claim **1** further comprising:

(a) a single light detector;

(b) means for directing a fraction of the laser light passing through said third PEM onto said single light detector;

(c) means for modulating said third PEM with a sine wave of voltage;

(d) means for eliminating any modulation of said first and second PEM's;

(e) a phase comparator having first and second inputs and an output;

(f) means for coupling said first input of said phase comparator to said single light detector; and

(g) means for coupling said second input of said phase comparator to one of the light detectors in said array;

wherein the difference between the phase of voltage derived from said light detector and said light detector in said array is an indication of the range of said housing from matter reflecting light received along said housing axis.

3. The apparatus of claim **2**, wherein said means for directing a fraction of said laser light comprises a beam splitter, said beamr splitter operating so that less than one percent of said laser light is reflected to said single light detector.

4. The apparatus of claim **2**, wherein said means for modulating said third PEM with a sine wave of voltage comprises:

(a) a source of sine waves of voltage; and

(b) a switch connecting said source of sine waves of voltage to said third PEM.

5. Apparatus as set forth in claim **1** wherein:

said objective is a Schwarzchild objective to collimate light.

6. Apparatus as set forth in claim **1** wherein

(a) said means for directing collimated light along said first optical path is one side of a flat two-sided mirror and a first flat one-sided mirror; and

(b) said means for directing laser light passing through said third PEM along said housing axis comprises a second flat one-sided mirror, a lens system and the other side of said flat two-sided mirror, said lens system being used to expand the cross-sectional area of the laser light.

7. Apparatus as set forth in claim **1** wherein said objective is comprised of:

(a) a spherical concave annular mirror mounted so as to receive light from said concave mirror;

(b) a convex mirror mounted so as to receive light from said annular mirror; and

(c) a correction lens mounted in the center of said annular mirror.

8. The apparatus of claim **1**, wherein said means for imaging light passing through said second linear polarizer onto said array comprises a plurality of lenses.

9. The apparatus of claim **1**, wherein said means for selectively modulating said first and second PEM's comprises:

(a) a plurality of sources of sine wave voltages, said sine wave sources having different frequencies;

(b) a plurality of sources of square wave voltage, said square wave sources having different frequencies; and

(c) a plurality of switches connecting said sources to said PEM'so that said PEM's can be modulated by said sine wave voltage, or by said square wave voltage or be unmodulated.

10. The apparatus of claim **1**, wherein said means for controlling the emission of laser light comprises a shutter control.

11. The apparatus of claim **1**, wherein said means for modulating said third PEM comprises:

(a) a source of square waves of voltage; and

(b) a switch connecting said source of square waves of voltage to said third PEM.

12. Apparatus for remotely detecting chemical and biological material comprising:

(a) means for collecting light from a field of view;

(b) means in a first optical path for producing an interferogram in response to a first modulation of said light and for producing a scattergram in response to a second modulation of said light;

(c) an array of light detectors mounted to receive light passing through said last mentioned means;

(d) a laser;

(e) means for producing light that is polarization modulated from said laser; and

(f) means for directing the polarization modulated light into said field of view.

* * * * *

ClibPDF - www.fastio.com