US006688032B1

(12) **United States Patent**
Gonzalez et al.

(10) **Patent No.: US 6,688,032 B1**
(45) **Date of Patent: *Feb. 10, 2004**

(54) **RIFLE-LAUNCHED NON-LETHAL CARGO DISPENSER**

(75) Inventors: **Noel Gonzalez**, Oviedo, FL (US); **Daniel J. Hartman**, Orlando, FL (US); **William G. Rouse**, Haure de Grace, MD (US); **Raymond J. Malecki**, Perry Hall, MD (US); **Paul W. Morgan**, Altamonte Springs, FL (US)

(73) Assignee: **The United States of America as represented by the Secretary of the Army**, Washington, DC (US)

(*) Notice: Subject to any disclaimer, the term of this patent is extended or adjusted under 35 U.S.C. 154(b) by 0 days.

This patent is subject to a terminal disclaimer.

(21) Appl. No.: **10/372,357**

(22) Filed: **Feb. 24, 2003**

Related U.S. Application Data

(62) Division of application No. 09/954,282, filed on Sep. 10, 2001, now Pat. No. 6,523,478.

(51) **Int. Cl.**[7] **F41C 27/06**
(52) **U.S. Cl.** **42/105**; 89/1.3; 102/485
(58) **Field of Search** 89/1.3; 42/105; 102/482, 483, 484, 485

(56) **References Cited**

U.S. PATENT DOCUMENTS

3,404,810 A	*	10/1968	Beers	
3,437,245 A	*	4/1969	Hebert et al.	
3,934,513 A	*	1/1976	Gabriels	
6,523,478 B1	*	2/2003	Gonzalez et al.	102/485

FOREIGN PATENT DOCUMENTS

SE	43 025	*	8/1917	102/483
WO	WO 93/13382	*	7/1993	

* cited by examiner

Primary Examiner—Stephen M. Johnson
(74) *Attorney, Agent, or Firm*—Ulysses John Biffoni

(57) **ABSTRACT**

A rifle muzzle launched projectile having a launch tube defining an interior cavity, and having an opening at one end with an inner diameter sized to fit over the end of a rifle muzzle; a bullet trap located in the launch tube cavity; and a payload assembly mounted on the launch tube. The payload assembly is further configured for safely releasing a payload in a controlled manner. The payload assembly also includes a casing for retaining an aerosol composition; a propellant located in the casing; a primer for igniting the propellant; and a frangible portion of the casing in contact with the aerosol composition.

11 Claims, 8 Drawing Sheets

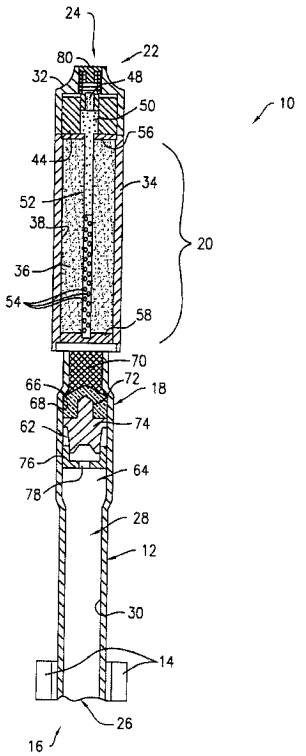

ClibPDF - www.fastio.com

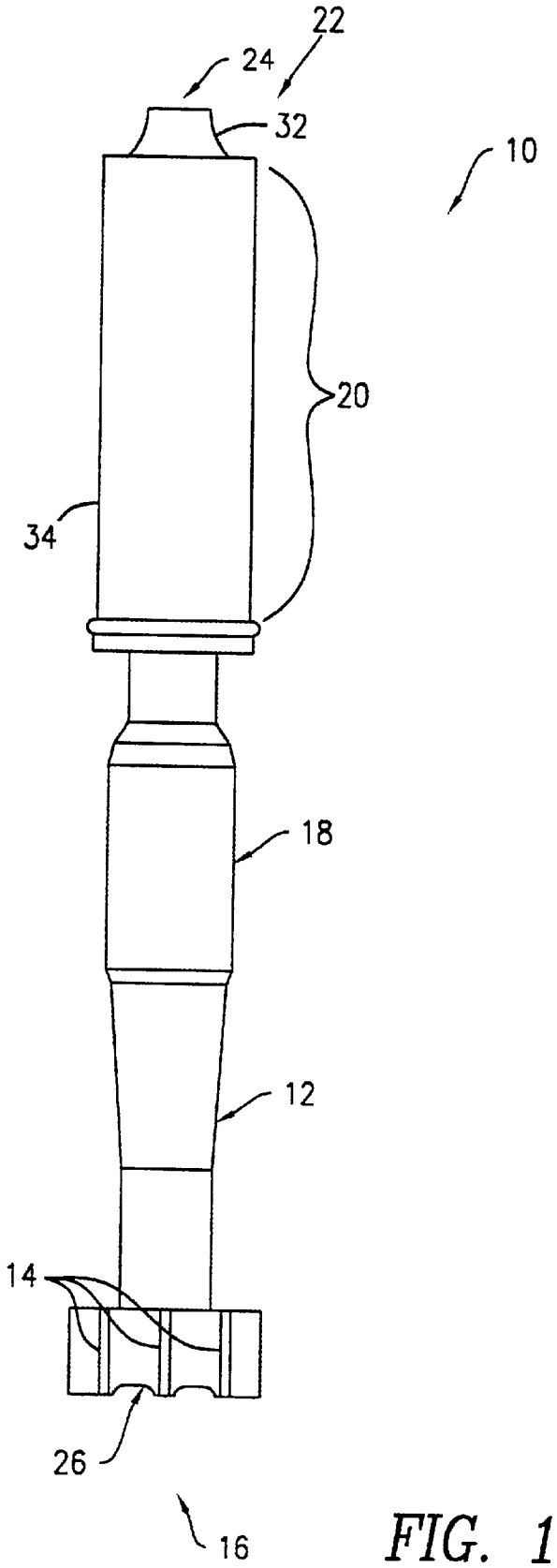

FIG. 1

ClibPDF - www.fastio.com

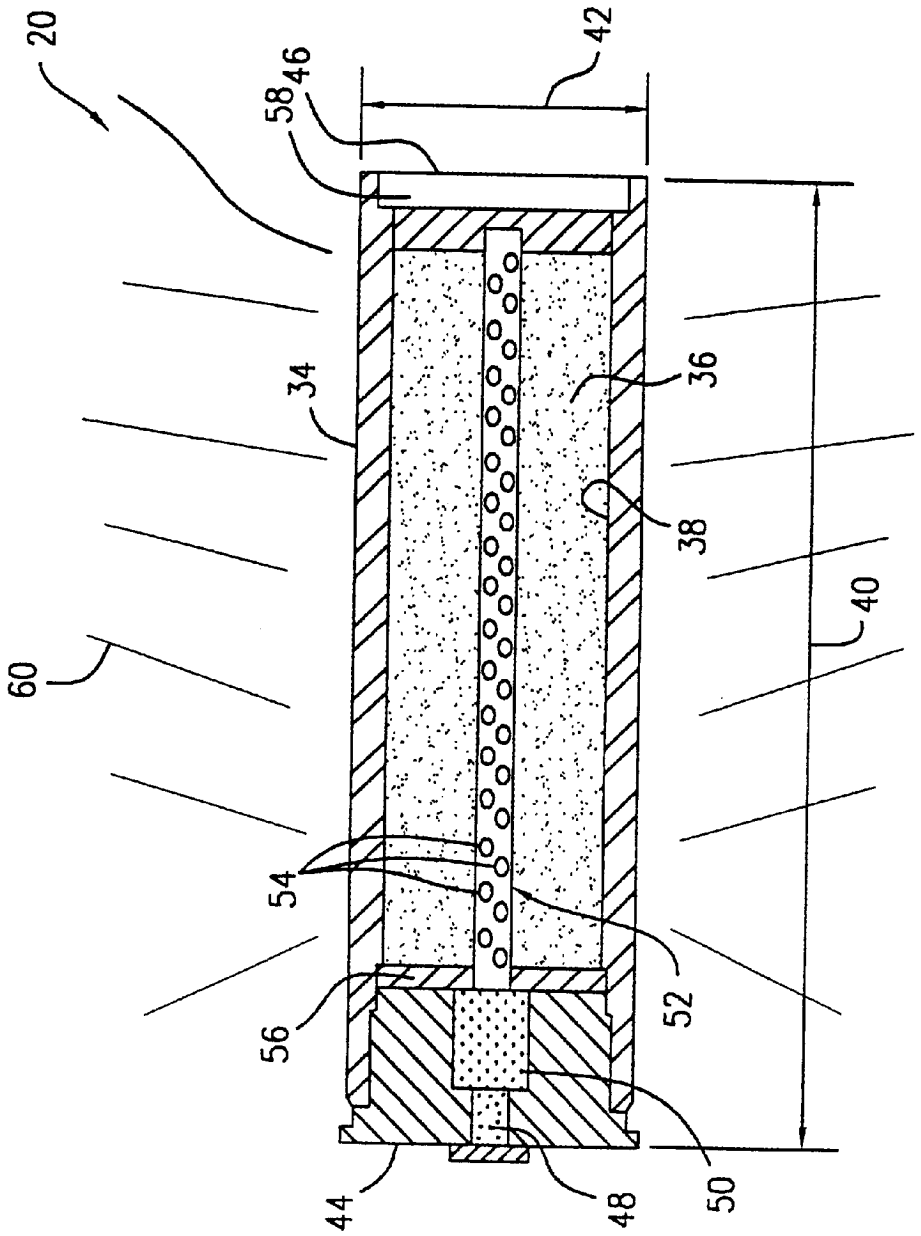

FIG. 2

ClibPDF - www.fastio.com

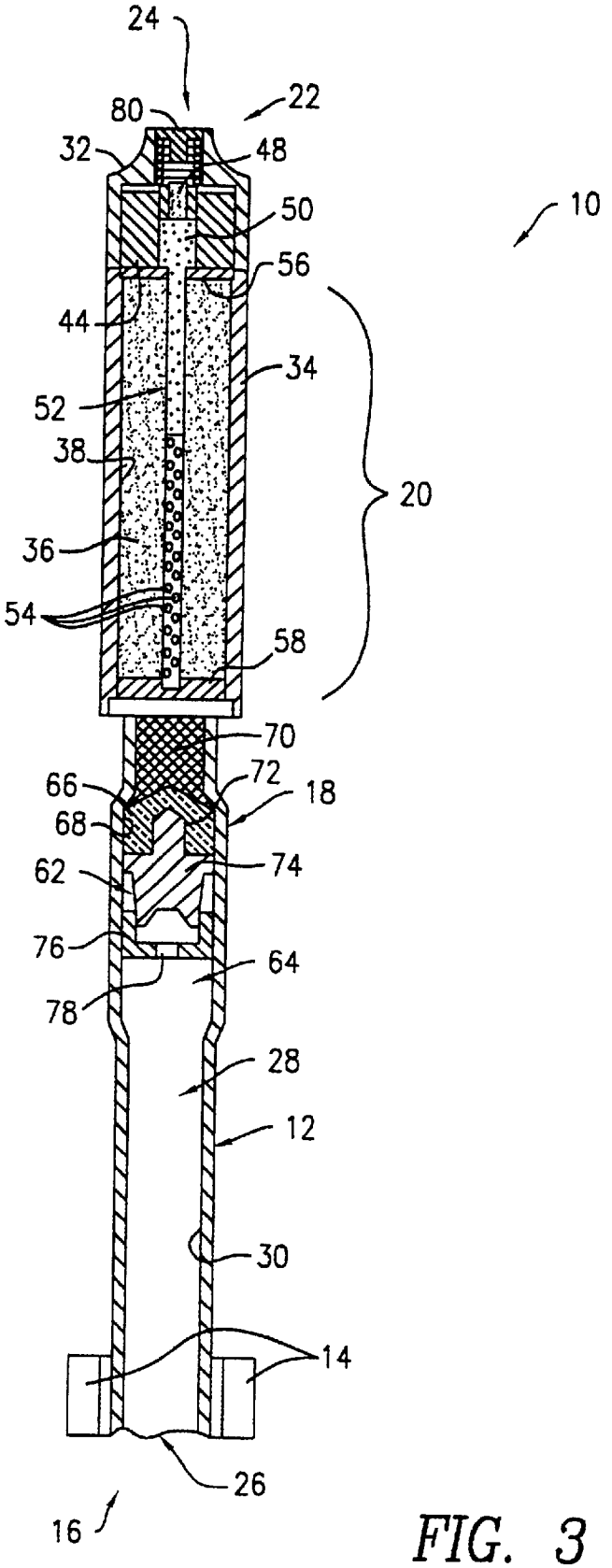

FIG. 3

ClibPDF - www.fastio.com

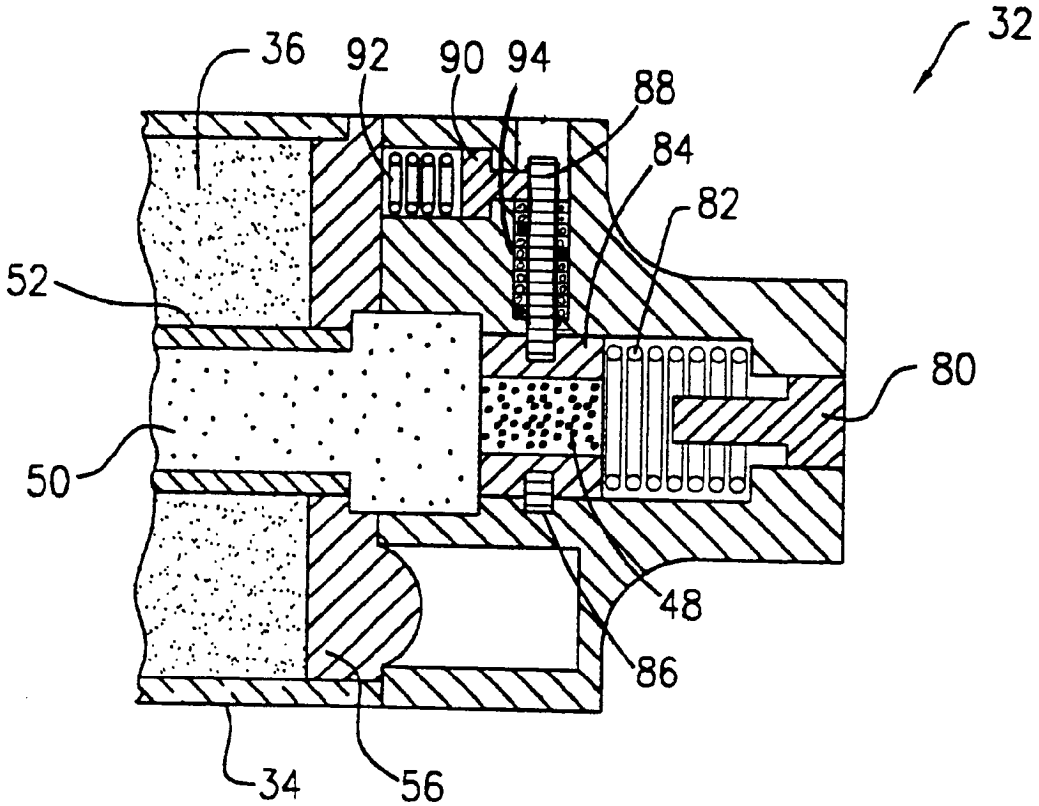

FIG. 4

ClibPDF - www.fastio.com

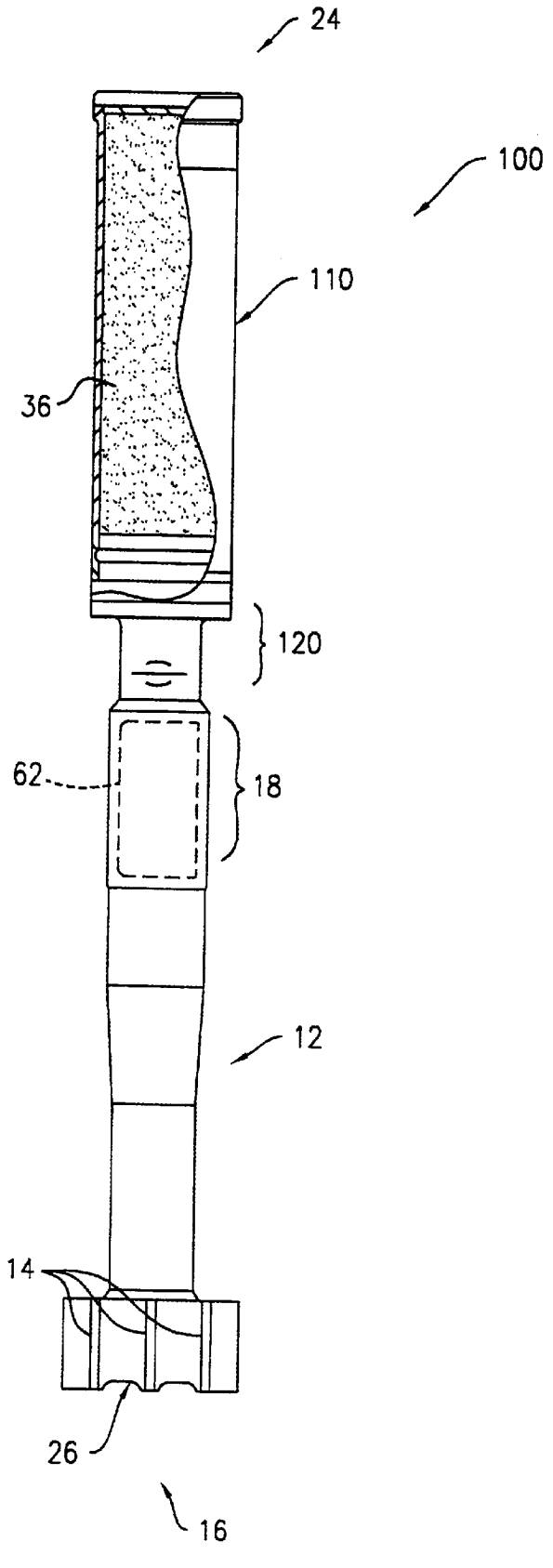

FIG. 5

ClibPDF - www.fastio.com

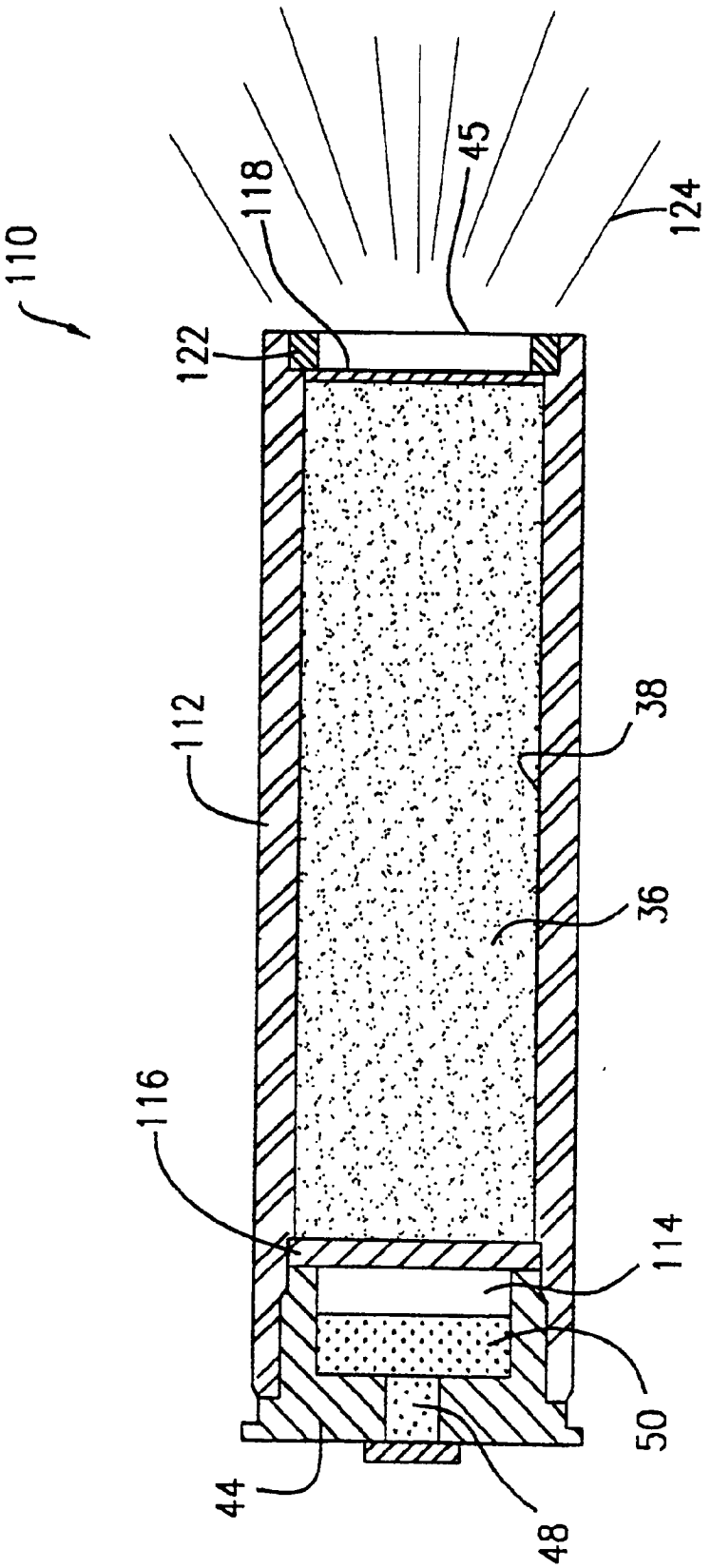

FIG. 6

ClibPDF - www.fastio.com

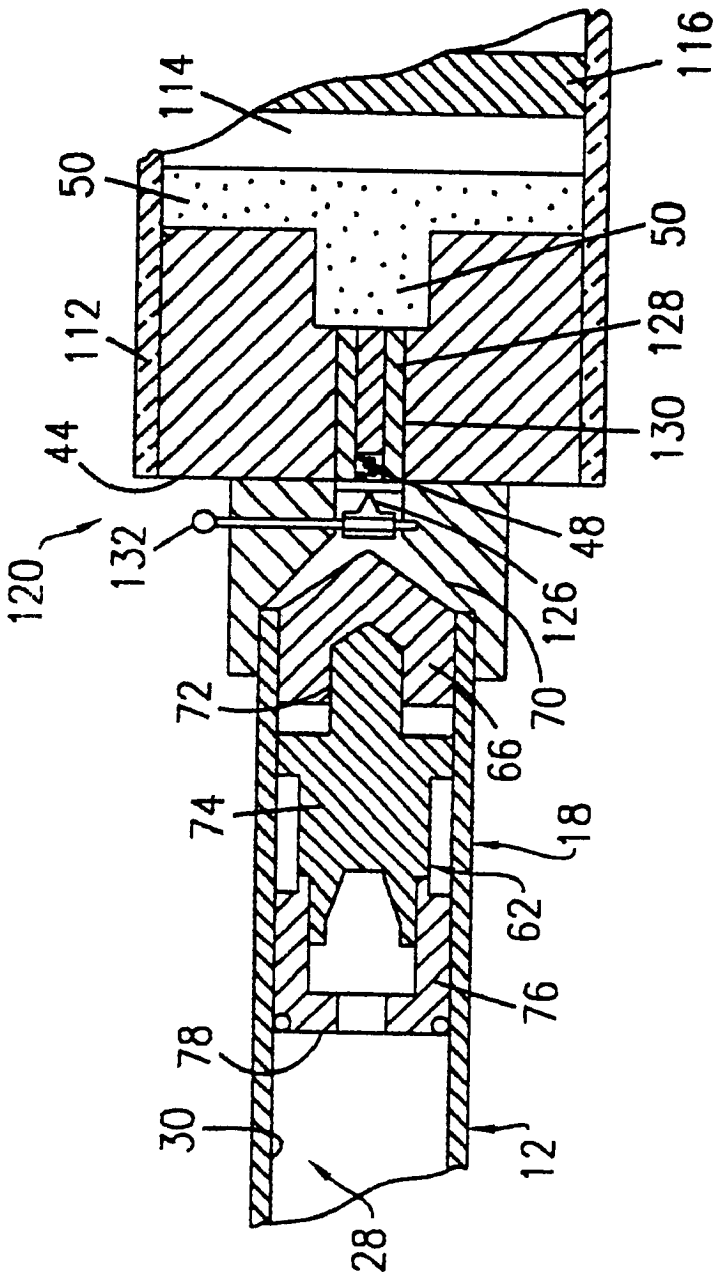

FIG. 7

ClibPDF - www.fastio.com

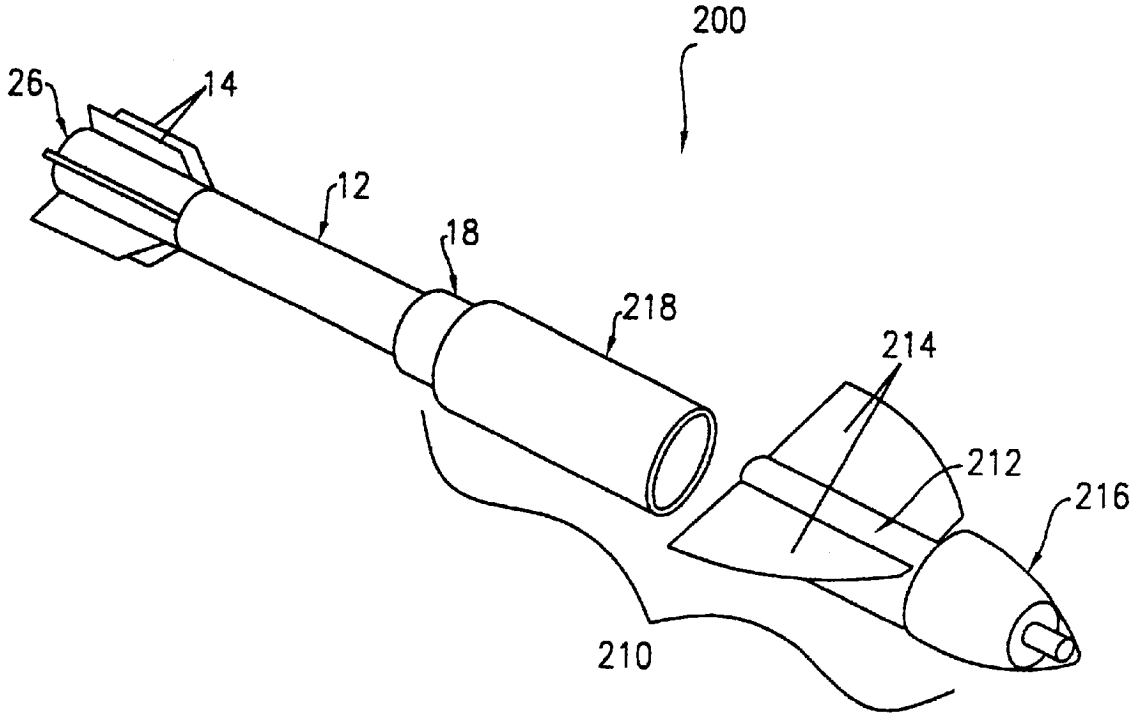

FIG. 8

ClibPDF - www.fastio.com

RIFLE-LAUNCHED NON-LETHAL CARGO DISPENSER

This application is a divisional of application Ser. No. 09/954,282 filed Sep. 10, 2001, now U.S. Pat. No. 6,523, 418.

GOVERNMENTAL INTEREST

The invention described herein may be manufactured, licensed, and used by or for the U.S. Government.

FIELD OF THE INVENTION

The present invention relates generally to a projectile, more particularly to a projectile adapted for launching from the end of a rifle muzzle for safely and effectively delivering a payload comprising, for example, one or more discrete electrical or mechanical devices, or a substance capable of being discharged in the form of an aerosol.

BACKGROUND OF THE INVENTION

Aerosols are relatively stable suspensions of liquid or solid particles in gas, especially air. Smoke, fog, and mist are typical examples of aerosols. Aerosols have been used extensively by the military for offensive and defensive purposes in order to incapacitate or confuse enemy troops and/or to protect friendly combat forces. In civilian use, aerosol dispersal is used mainly for police and firefighting purposes. Such aerosol payloads have included smoke, obscurant, fire retarding agents, crowd control agents, dye indicators, and the like.

In the course of a military operation, a military force may be targeted by visual, ultraviolet, infrared, millimeter wave radar sensors, and the like. To counter such targeting attempts, various types of filler payloads which are capable of being disseminated in the form of an aerosol, are prepared for obscuring and protecting potential targets. By way of example, the filler payload may include carbon fibers to block energy in the radar signal region of the electromagnetic spectrum, smoke particles to obscure visual detection, and brass flakes to interfere with infrared detection and targeting. In civilian use, aerosols are dispersed by police and fire units for controlling a large unruly crowd, subduing a perpetrator, carrying out a diversionary tactic, providing personal protection, and/or marking or signaling. Aerosols used in fire fighting situations provide fire fighters the ability to remove fire sustaining elements from an environment, such as heat and oxygen. Aerosols currently used are typically supplied by remote hoses and/or vehicles and generally require an initiation time delay and are dispersed within a spray.

The aerosol generating devices typically used by the military incorporate high explosive devices or grenades to disperse the corresponding particle or aerosol payloads. This presents a problem since such high explosive devices and grenades tends to yield shrapnel and shock waves which can potentially cause injury and damage. Typically, in order to disperse the aerosol payloads at a particular site, the devices are either thrown by hand or delivered by specialized launchers. Throwing the aerosol generating device is often inefficient and inaccurate and limited in providing suitable delivery ranges. The use of specialized launchers are costlier, more complicated and less versatile. Each of these modes of delivery involve significant risks to the operator dispatching the device.

Rifle muzzle launched projectiles have been in existence for years and are adapted to be accurately launched over

considerable distance from the end of a rifle muzzle. This method of launching projectiles provides advantages in terms of range and accuracy over hand-thrown counterparts and requires only a conventional rifle instead of a specialized launcher. Grenades and explosive devices have been adapted to be launched in this manner. Such muzzle-launched projectiles commonly employ a bullet trap-rifle cartridge combination where the end portion of the projectile in the form of a launch tube is slipped over the end of a rifle muzzle. The projectile is aimed at a suitable target prior to firing of the rifle. When the rifle is fired, the gases generated from the rifle cartridge pressurizes the internal cavity of the projectile launch tube and propels the projectile off of the rifle muzzle. This entrapped gas pressure provides the projectile with a primary means of propulsion. The bullet fired is safely captured in the bullet trap.

In view of the foregoing, there is a need to deliver and disperse a payload comprising an aerosol forming substance without the use of high-explosives, the formation of shrapnel and shock wave. In addition, the devices for rapid dispersion and delivery must be capable of being readily launched from existing conventional rifle muzzles, while providing efficient and effective target accuracy and range. Furthermore, the projectile is adapted for delivering a range of payloads while inflicting minimal injury and damage near or around target areas.

In the same manner, there is also a need for delivering non-aerosol payloads or articles, including, but not limited to, flash grenades, concussion grenades, nets, noise generators, stun balls, tire puncturing elements, electromagnetic pulse generators, mines or bomblets, listening devices, signal emitting objects, unmanned aerial vehicles, and the like for efficient, rapid dispersal and delivery.

SUMMARY OF THE INVENTION

The present invention is directed to a rifle muzzle launched projectile which is constructed for rapid and efficient delivery of a payload to a target site. The projectile is further adapted to release the payload in a safe controlled manner without producing dangerous shrapnel and fragmentation or explosive shockwaves. The projectiles may be launched over a considerable range with remarkable accuracy and precision from any conventional rifle. The payload may include aerosol-based substances, one or more electronic and/or mechanical devices, and the like.

In one aspect of the present invention there is provided a rifle muzzle launched projectile which comprises:

- a launch tube defining an interior cavity, and having an opening at one end with an inner diameter sized to fit over the end of a muzzle of a rifle;
- a bullet trap fixedly located in the launch tube cavity opposite from the launch tube opening, the bullet trap adapted for safely capturing a bullet fired from the muzzle; and
- a payload assembly mounted on the launch tube opposite from the opening end, the payload assembly further configured for safely releasing a payload associated therewith in a controlled manner during delivery in absence of shrapnel formation or fragmentation.

BRIEF DESCRIPTION OF THE DRAWINGS

Various embodiments of the invention are described in detail below with reference to the drawings, in which like items are identified by the same reference designation, wherein:

ClibPDF - www.fastio.com

FIG. **1** is a side elevational view of a rifle muzzle-launched projectile for a first embodiment of the present invention;

FIG. **2** is a cross sectional view of a payload assembly component from the projectile shown in FIG. **1**;

FIG. **3** cross sectional view of the projectile of FIG. **1** illustrating the various components thereof in greater detail;

FIG. **4** is an exploded detailed cross sectional view of a point-impact fuse assembly component of the projectile shown in FIG. **1**;

FIG. **5** is a partial cross sectional view of the rifle muzzle-launched projectile for a second embodiment of the present invention;

FIG. **6** is a side cross sectional view of a payload assembly component of the projectile shown in FIG. **5**;

FIG. **7** is an exploded detailed cross sectional view of a time-delay fuse assembly component for activating the projectile of FIG. **5** during delivery; and

FIG. **8** is a perspective view of a projectile for a third embodiment of the present invention adapted for delivering an unmanned aerial vehicle over or near a target area.

DETAILED DESCRIPTION OF THE INVENTION

The present invention is directed to a payload delivering projectile which is capable of being launched from the end of a rifle muzzle in a safe and effective manner. The use of a payload delivering projectile which can be launched from the muzzle end of a rifle, advantageously eliminates the need for acquiring specialized launching equipment and projectiles, and is preferable over less effective hand-thrown methods of delivery. The projectile of the present invention is further adapted for carrying a range of payloads and dispensing the payload at a distance away from the launch point in a safe and accurate manner. The mode of dispensing the payload is relatively safe to the persons or structures near the projectile's target. The projectile of the present invention advantageously comprises a non-metallic frangible casing which is adapted to rupture under controlled build-up of pressure without inflicting serious injury or damage. The projectile utilizes controlled pressurization of the frangible casing to effect a safe blowout and dispersal of the corresponding payload. In this manner, the formation of shrapnel or dangerous fragmentation and shock wave associated with explosive devices, is minimized or eliminated causing little or no injury to persons and/or damage to structures located at or near the target area.

The term "payload" means herein to include any substance, material or device which is desired to be expeditiously delivered to a target area using the projectile of the present invention as the carrying and dispersing device. The payload may include, but is not limited to, a substance capable of being dispersed in the form of an aerosol, electronic devices, unmanned aerial vehicles, flash-bang munitions, sting balls, ground sensors, mines, bomblets, concussion grenades, tire puncturing elements, signal emitting devices, and the like. The aerosol substance is preferably selected from the group consisting of smoke, crowd control agents, obscurant, target marking compounds, dyes and inks, chaffs and the like. Of course, all payloads will be in compliance with national and international laws, treaties, and agreements to which the United States is a party.

Referring to FIG. **1**, a payload delivering projectile **10** which is adapted to be conveniently launched from the end of a muzzle of a rifle, is shown for one embodiment of the present invention. The projectile **10** generally comprises a tail section **12** with a plurality of radially spaced fins **14** near the bottom end **16** thereof for providing aerodynamic stability, a bullet trap section **18**, a payload assembly **20**, and a trigger or fuse assembly **22** at the top end **24** thereof. It is noted that the fuse assembly **22** may be adapted to reside in any part of the projectile **10** depending on the payload type and method of dispersal used. The tail section **12** further includes an opening **26** at the bottom end **16** thereof, in communication with a launch tube **28** (as best shown in FIG. **3**). The tail section **12** and the launch tube **28** is typically made of a high strength material, such as aluminum alloy, fiber reinforced plastic composite, or steel, depending on the weight and trajectory range requirements of the payload.

The launch tube **28** includes a cylindrical surface **30** (as best shown in FIG. **3**) of substantially uniform diameter along its entire cylindrical length. The inner diameter of the launch tube **28** is sized to fit over the muzzle or a fire suppressor component of the rifle muzzle, with a few thousandths of an inch tolerance. The projectile **10** is adapted to be launched from the rifle muzzle end where it proceeds on a trajectory path towards a target area. During the flight or upon reaching the target area, the payload assembly **20** of the projectile **10** is functioned by the trigger or fuse assembly **22** whereupon the corresponding payload is released or discharged therefrom. The payload is discharged in a safe controlled manner for minimizing or preventing injury to persons and damage to property near or at the target area.

More specifically, the present invention utilizes a non-lethal propellant-base payload dissemination mechanism for dispersing an aerosol or non-aerosol material in a safe, efficient and effective manner during combat or non-combat operations. The mechanism is pyrotechnic based which does not depend on explosive means such as high explosives, nor pneumatic means such as "bleed air" for proper functioning. The mechanism generally comprises a frangible casing defining a filler space containing particles of a powder, a liquid or an aerosolizable material, a firing primer in connection with a propellant, and a gas flow regulator providing fluid communication between the propellant and the filler space. When the primer is set off by suitable means, the propellant generates an expanding gas which flows through the regulator into the fill space. As the fill space is pressurized, the contents of the filler space are deagglomerated and fluidized until the frangible casing ruptures and releases the contents in the form of an aerosol cloud. An example of the propellant-based aerosol generating mechanism described above is disclosed and taught in U.S. Pat. No. 6,047,644, the contents of which is incorporated herein by reference in its entirety.

Referring to FIG. **2**, the payload assembly **20** of the projectile **10** is shown. The payload assembly **20** includes a frangible casing **34** for holding a payload therein. The frangible casing **34** is composed of any material which permits retention of the powder particles **36** in the payload assembly **20** until a sufficient pressure is attained whereupon discharge occurs while yielding little or no shrapnel or fragments. The frangible casing **34** further defines a filler space **38**. Preferably, the frangible casing **34** is composed of a durable, relatively strong material including, but not limited to, plastic, ceramic, cellulose-based material, fibrous material, and the like. In the preferred embodiment, the casing **34** has a cylindrical construction with a length **40** of from about 2 to 6 inches, preferably from about 4 to 5 inches. The diameter or width **42** of the casing is preferably from about 1 to 4 inches, more preferably from about 1 to 3

ClibPDF - www.fastio.com

inches, and most preferably about 1.602 inches. The dimensions of the casing **34** are arranged so that the maximum dispersion of the powder particles **36** within the filler space **38** in the form of an aerosol, can be achieved. It is noted that the width **42**, the length **40** and other dimensions of the casing **34** can vary according to factors such as propellant strength, void spacing, payload type and size, dispersal method, and the like.

The payload assembly **20** further includes a base end **44** and a forward end **46**. The base end **44** contains a firing primer **48** and a propellant **50** with the firing primer **48** attached to the propellant **50** so that the propellant **50** may be ignited by the primer **48**. The firing primer **48** may be any primer type which is capable of initiating burn of the propellant **50**, preferably the primer **48** is a percussion primer which is fired by mechanical contact. The filler space **38** is further enclosed by an aft cap **56** and a forward cap **58** for maintaining a tight seal with the frangible casing **34**.

The propellant **50** is a non-explosive charge. As compared with high explosives (HE), the propellant **50** used in the present invention is relatively slow burning. The rate of burn of the propellant **50** produces gas generation, creating excessive or large amounts of gas over a short period of time. The payload assembly **20** further includes a diffuser tube **52** extending along a central axis of the assembly **20** from the propellant through the aft cap **56** into the filler space **38**. The diffuser tube **52** further includes a plurality of radially directed holes **54** extending through the surface portion thereof. The holes may include any number or size, which is varied dependent on the size of the payload assembly **20** and the amount of the propellant **50** and the powder particles **36** used. The variations of the number and size of the holes may be readily determined by those skilled in the art. The holes **54** are preferably covered by a thin film or paper thin sheet of a perforatable material to retain the powder particles **36** and the propellant **50** in their respective areas. The film may be composed of any material which facilitates this separation. The sheet may be paper, metal such as aluminum foil, fabrics, and the like. Preferably, the holes are covered by adhesive backed paper. The diffuser tube **52** may be composed of a hard, durable material such as plastic, ceramic or metal. Preferably, the diffuser tube **52** is metal.

The diffuser tube **52** is adapted to convey the gas generated by the propellant **50** into the filler space **38** via the holes **54**. Excessive or large amounts of gas are those amounts which are capable of effectively fluidizing the powder particles **36** as the gases from the propellant **50** travel into the filler space **38**. Unlike a high yield explosive reaction, i.e. detonation, which consists of shock wave that travels through the surrounding material, an ignited propellant reaction is a combustion reaction or deflagration that acts as a gas generator system to release kinetic energy in a controlled manner.

The propellants **50** used in the present invention include propellants such as single-base, double-base, triple-base, composite propellant, ball propellant, and similar compounds. Most preferably, the propellant **50** is double-base. Single-base propellants are low cost propellants that have a low flame temperature and low energy content, and contain such compositions as nitrocellulose. Double-base propellants are more energetic than single-base propellants, and may contain such compositions as nitrocellulose gelantinized by nitroglycerin. Triple-base propellants generally contain nitroguanidine as an additional energizer which increase the energy content for the composition without raising the flame temperature. Composite propellants contain a polymer binder, a fuel, and an oxidizer. Ball propellant contains nitrocellulose extracted from waste single-base propellant. Additional types of propellant **50** which function to fluidize the powder particles **36** for the present invention are known to those skilled in the art.

The powder particles **36** may include military payloads of screening obscurant, such as titanium oxide, brass flakes, carbon flakes and fibers, graphite flakes, smoke chaff, and the like. Additionally, civilian payloads of crowd control agents, such as ortho-chlorobenzalmalononitrile (CS) and oleoresin capsicum (OC), smoke, dye indicators, sticky foams, fire retardants, and the like, may be used as powder particles **36** for law enforcement and firefighting uses. When the payload assembly **20** is modified to create an infrared screen, preferably the particles **36** comprise brass flakes. When obscurant are used, those powder particles **36** which are granules preferably have diameters ranging from about 0.5 μm to 2.0 μm. When the particles **36** are flakes comprising irregular plate-shaped particles, preferably they have diameters ranging from about 1.0 μm to 100 μm. When fibrous materials are used, such as carbon fibers, which are electrically conductive cylinder dipoles, the diameters of the fibers preferably range from about 3.5 μm to 20 μm.

The base end **44** and the forward end **46** retains the frangible casing **34** and the forward and aft caps **58** and **56** in place adjacent to the filler space **38**. The frangible casing **34** retains the powder particles **36** in the filler space **38** until sufficient pressure is established by the expanding gases of the propellant **50** thereby causing the frangible casing **34** to rupture radially outward and expel the particulate powder **36** therethrough in the form of an aerosol. Preferably the frangible casing **34** withstands pressures of from about 100 psi to 1500 psi prior to rupture, more preferably from about 1200 psi to 1400 psi prior to rupture.

The payload assembly **20** provides for aerosol formation without the use of high explosives and/or use of ordinance-type grenades. It provides instant dissemination of an aerosol in a localized area without fragmentation or shock wave hazards. It further permits dispersion of several types of aerosols. Instead of aerosol payloads, discrete articles of larger size may also be delivered in the manner described above.

FIG. **3** shows a cross sectional view of the projectile **10** illustrating the arrangement of the internal components. The payload assembly **20** described above is securely attached to the tail and the bullet trap sections **12** and **18**. For certain applications, the attachment may be modified to permit the payload assembly **20** to disengage from the tail section **12** during delivery of the payload. The bullet trap section **18** defines a substantially cylindrical bore **64** in communication with the launch tube **28**. A bullet trap **62** is located and securely retained within the bore **64** of the bullet trap section **18**. The bullet trap **62** is used to safely capture and retain the bullet fired from the rifle used to launch the projectile **10**. The bullet trap **62** also prevents any damage to the structure of the projectile **10** often associated with loading under high bullet impact acceleration. The bullet trap mechanism which is shown and described in the present invention, is disclosed and taught in U.S. Pat. No. 5,574,245 the content of which is incorporated herein by reference in its entirety.

The bullet trap **62** is comprised of an anvil **66**, made of high strength steel alloy. The anvil **66** has a cylindrical exterior surface **68** of a diameter slightly smaller that the diameter of the bore **64**. The top external surface of the anvil **66** is tapered to match and abut against a tapered internal surface of an internal bulkhead **70**. Forward of the bulkhead **70** is affixed the payload assembly **20**. Opening toward the

ClibPDF - www.fastio.com

rear of the anvil **66** is an interior surface **72**. The interior surface **72** of the anvil **66** has a uniform cylindrical surface portion, followed by a tapered surface portion. This tapered surface defines an internal bulkhead within the anvil **66**.

The bullet trap **62** further includes a plug **74** made of aluminum which is adapted to fit into the anvil **66**, and an end cap **76** for retaining all the parts of the bullet trap **62** in the bore **64**. The plug **74** serves to absorb most of the bullet impact energy and mitigate the shock accelerations before the bullet is finally captured by the anvil **66**. The end cap **76** includes a through hole **78** having a diameter slightly larger than the diameter of the bullet, for allowing the fired bullet to enter the bullet trap **62** and be safely captured therein.

It is noted that the bullet trap is not limited to the configuration shown and described herein and may include any conventional bullet trap mechanism that is employed in a rifle muzzle launched projectile for safely capturing and retaining a bullet fired from a rifle.

When the bullet is fired into the launch tube **28**, the tube **28** pressurizes with the cartridge gases from the rifle. The explosive gases then begin to propel the projectile **10** away from the rifle muzzle. This entrapped gas pressure is the primary means of propulsion. It has been observed that the momentum of the bullet adds less than 12% to the launch velocity of the projectile **10**. The remaining launch velocity is contributed by the cartridge gases. The fired bullet is captured and safely retained by a bullet trap located at the end of the launch tube **28** within the bullet trap section **18**. The launched projectile **10** proceeds along a trajectory path to a target area where it may be triggered or initiated at any point along the path using suitable means including, but not limited to, a time-delay fuse or a point-impact fuse. Upon such triggering, the payload assembly **20** operates to release the payload contained in the frangible casing **34**. It is noted that the projectile **10** and the payload assembly **20** may each be modified depending on the type of triggering device is to be used and the manner in which the payload is to be released.

With reference to FIGS. **1** and **3**, the projectile **10** is shown equipped with a point-impact fuse assembly **32** which upon impact with a hard surface, triggers the discharge of the payload. The point-impact fuse assembly **32** is operatively associated with the payload assembly **20** at the base end **44**. With specific reference to FIG. **3**, the fuse assembly **32** includes a striker **80** at the nose end of the fuse assembly **32**. Upon impact with a target, the striker **80** mechanically contacts the firing primer **48** for effective ignition. The burning primer **48** ignites the propellant **50** initiating the payload dispersal process as described above.

Referring to FIG. **4**, an exploded detailed view of the point-impact fuse assembly **32** is shown. The point-impact fuse assembly **32** comprises the striker **80**, a slider mechanism **84** containing the firing primer **48**, a spring **82** for biasing the slider mechanism **84** away from the striker **80**, a safing pin **86**, a slider pin **88**, an arming interlock setback pin **90**, a setback spring **92**, and a slider pin spring **94**. The striker **80** is securely fixed and immovable in the nose end of the assembly **32**. The slider mechanism **84** holds a quantity of firing primer **48**. The slider mechanism **84** is adapted for longitudinal sliding movement. The spring **82** biases the slider mechanism **84** away from the striker **80**. Upon impact with a target, the inertial force of the slider mechanism **84** sufficiently overcomes the spring bias force and contacts the striker **80** for ignition. Once ignited, the slider mechanism **84** returns to its initial position biased by the spring **82**. The ignited firing primer **48** comes into contact with and ignites the propellant **50**, thus initiating the payload discharge process described above. The point-impact fuse assembly includes safety features for preventing premature discharge of the payload. The safing pin **86** immobilizes the slider mechanism **84** to prevent unintentional contact between the primer **48** and the striker **80** during storage, handling and transportation. The safing pin **86** must be removed by the user prior to launching.

An additional safety mechanism is provided to prevent final arming of the fuse assembly **32** until a launch setback is sensed as the projectile **10** leaves the rifle muzzle. The arming interlock setback pin **90** is biased against the slider pin **88** by the setback spring **92**. The slider pin **88** biased radially outward by the slider pin spring **94**, is immovably fixed by the biased setback pin **88**. The slider pin **88** is adapted to securely engage with the slider mechanism **84** to prevent any longitudinal sliding movement. During launch, the sudden acceleration of the projectile **10**, causes the arming interlock setback pin **90** to retract from the slider pin **88**. The released slider pin **88** is biased radially away from the slider mechanism **84** by the slider spring **94**, thus permanently disengaging from the slider mechanism **84** for final arming of the fuse assembly **32**.

With reference to FIGS. **1** to **4**, the overall operation of the projectile **10** will be described. The end of the rifle muzzle is first inserted and mounted into the launch tube **28** of the projectile **10** in preparation for launching. The user removes the safing pin **86** and aims the projectile **10**. The operator fires a bullet chambered in the rifle to launch the projectile **10**. As the bullet travels the length of the rifle muzzle and the launch tube **28**, it enters the through hole **78** of the end cap **76**, and begins to penetrate the rear surface of the aluminum plug **74**. The strength of the bullet is insufficient to resist the strength and density of the aluminum plug **74**. As a result, the bullet components begin to expand and decelerate within the central mass of the aluminum plug **74**. Eventually, the bullet is captured by the steel anvil **66**. The projectile **10** begins to be propelled by the generated cartridge gases, and the setback pin **90** is retracted by setback forces associated with acceleration of the projectile **10** for final arming of the fuse assembly **32**. The projectile **10** becomes airborne and follows a trajectory path towards the target.

When the top end **24** of the projectile **10** strikes the target in the course of its trajectory path, the striker **80** contacts and ignites the firing primer **48** which in turn initiates the burning of the propellant **50**. As the propellant **50** burns, pressurized gases are generated and flows through the diffuser tube **52**. These gases quickly blow through the thin film on the diffuser tube **52** and are released through the diffuser tube **52** in a controlled manner into the filler space **38**. The gases flow between the powder particles **36** within the filler space **38** which causes the powder particles **36** to fluidize. As the pressure increases, the frangible casing **34** breaks radially outward, allowing the powder particles **36** to be released in the form of an aerosol **60** into the atmosphere (as shown in FIG. **2**).

Referring to FIG. **5**, a payload delivering projectile **100** is shown for a second embodiment of the present invention. The projectile **100** is substantially similar to the projectile **10** described above. However, the components comprising the payload assembly and the fuse assembly is different. The projectile **100** includes a payload assembly **110** and a time-delay fuse assembly **120** located near the bullet trap section **18** thereof. In this embodiment, the payload assembly **110** is adapted to discharge the payload **36** through the top end **24** of the projectile **100** for an air burst type of discharge event.

ClibPDF - www.fastio.com

Referring to FIG. **6**, the payload assembly **110** of the projectile **100** is shown. The payload assembly **110** includes a housing **112**. The housing **112** can be comprised of any material or construction which permits the containment of the powder particles **36** within a filler space **38**. Preferably, the housing **112** is composed of a hard, relatively strong material such as plastic, ceramic, or metal. More preferably, the housing **112** comprises a metal, and most preferably the housing comprises aluminum. In this embodiment, the housing **112** has a cylindrical construction with similar dimensions as the frangible casing **34** of projectile **10**.

The housing **112** has a base end **44** and a retainer end **45**. The base end **44** contains the firing primer **48** in contact with the propellant **50** so that the propellant **50** may be ignited by the primer **48**. The housing **112** may further contain an open area **114** between the propellant **50** and a diffuser plate **116**. The open area **114** allows for expansion of the propellant gases from the burning propellant which fluidize powder particles **36** out of the filler space **38** once the propellant **50** has been ignited. Preferably, the open area **114** has a volume ratio to the propellant **50** of 1 to 10, more preferably 1 to 5, even more preferably 1 to 4, and most preferably 1 to 3.

Adjacent to the open area **114** on the opposite side of the propellant **50** is the diffuser plate **116**. The diffuser plate **116** partitions the open area **114** and the filler space **38**. The diffuser plate **116** is adapted to allow gases generated from the ignited propellant **50** to travel therethrough into the filler space **38**. The diffuser plate is unitary in construction and is composed of a solid material for partitioning and separating the propellant **50** from the powder particles **36**. The diffuser plate **116** has a thin width of from about 0.0625 inches to 0.25 inches, more preferably from about 0.125 inches thick. Multiple openings or holes are arranged through the face of the diffuser plate **116**. The holes may be any number or size, which is varied dependent on the size of the payload assembly **110** and the amount of the propellant **50** and the powder particles **36** used. The diffuser plate **116** preferably has from about 2 to 20 holes, more preferably 4 to 10 holes, and most preferably from 7 to 8 holes. The sizes of the holes is preferably from about 5.0 to 10 mm in diameter, more preferably from about 7.0 to 8.0 mm in diameter. The holes are covered by a paper thin film or sheet to retain powder particles **36** and the propellant **50** in their respective areas as described above. The diffuser plate **116** is composed of a durable, high strength material such as plastic, ceramic, or metal. Preferably, the diffuser plate **116** is metal.

The filler space **38** is located inside the housing **112** adjacent to the diffuser plate **116** at one end, and a frangible end seal or rupture disk located at the retainer end **45** of the housing **112**. The filler space **38** is preferably from about 1.0 to 3.0 inches long, more preferably about 2.5 inches long. The volume of the filler area **38** is preferably from about 1.35 to 5.0 cubic inches, most preferably about 3.5 cubic inches. The powder particles **36** are located within the filler space **38**.

At the retainer end **45** of the housing **112**, a retaining ring **122** holds the frangible end seal (rupture disk) **118** in position adjacent to the filler space **38**. The frangible end seal **118** holds the powder particles **36** in the housing **112** until sufficient pressure is generated by expanding gases of the propellant **50** to discharge the particles **36** in the form of an aerosol cloud **124**. The end seal **118** is composed of any material which permits retention of the powder particles **36** in the housing **112** until a desired pressure is reached with minimal formation of shrapnel fragments or shock wave. Preferably, the end seal **118** is a frangible material such as cellulose, plastic, fibrous material, elastomer, metal, and the like.

As the propellant **50** burns, gases generated in the open area **114**, rapidly blow through the thin sheet of material covering the diffuser plate **116**. The gases are released through the diffuser plate **116** in a controlled manner into the filler space **38** where the gases fluidize the powder particles **36** under pressure. The gases flow between the powder particles **36** to fluidize and deagglomerate prior to being expelled through the end seal **118**.

The projectile **100** is adapted for discharging its payload for air-burst delivery at any point along its trajectory path. The projectile **100** includes a time-delay fuse assembly **120** located between the payload assembly **110** and the bullet trap assembly **62** as will be described.

Referring to FIG. **7**, the time-delay fuse assembly **120** is shown for a more detailed view of the components arranged therein. The fuse assembly **120** includes a striker **126** in abutting engagement with the bullet trap assembly **62** specifically with the anvil **66**, a tube **130** containing a primer **48** and a pyrotechnic delay column, and a propellant **50**. A safing pin **132** is operatively engaged with the striker to prevent premature ignition of the primer **48**. Prior to launching the safing pin **132** must be removed for proper operation. When the rifle is fired, the bullet is captured by the bullet trap assembly **62**. The momentum of the fired bullet is transferred from the anvil **66** to the striker **126**. Upon contact with the anvil **66**, the striker **126** is adapted to mechanically strike a percussion primer **48** for ignition of the fuse assembly **120**. The percussion primer **48** is in contact with a pyrotechnic delay column **128** in the tube **130**. The pyrotechnic delay column **128** is adapted to burn at a slower rate to delay ignition of the propellant **50** locate at the end of the tube **130**. After a span of time, the pyrotechnic delay column **128** burns completely through where it ignites the propellant **50** initiating the payload dispersal process as described above.

With some modifications, the point-impact fuse assembly **32** similar to the one shown in FIG. **4**, may be incorporated into the projectile **100**. The point-impact fuse assembly **32** is mounted at the top end **24** and the discharge end seal **118** is located at the opposite end of the payload assembly **110**. During impact the payload assembly **110** is adapted to disengage from the tail section **12** for effecting payload discharge.

In a third embodiment of the invention, a projectile **200** is shown with a modified pay load assembly **210** in FIG. **8**. The projectile **200** is capable of being launched from the end of a rifle muzzle in the same manner described above. The payload assembly **210** is adapted to transport a relatively lightweight detachable device at the nose portion of the projectile **200**. It is noted that the relatively lightweight detachable device may include a multitude of devices which may be delivered from the end of a rifle muzzle. The payload assembly **210** includes an unmanned aerial vehicle (UAV) **212** which is adapted to detach from the payload assembly **210** at a set time or position after launching. The payload assembly **210** basically comprises a cylindrical body **218** attached to the rear portion of the UAV **212** by one or more detachable fasteners (not shown). The detachable fasteners may include any fasteners which can cause detachment of the fastened parts at a select time or place during delivery flight. The UAV **212** includes a pair of wing structures **214** adapted for keeping the UAV **212** airborne, and an apparatus **216** in the nose portion thereof. The apparatus **216** may include surveillance equipment, electronic jamming device, a camera, and the like which may facilitatively be carried by the UAV **212** over a length of distance. Once the UAV **212** is released or jettisoned from the projectile **200**, the UAV

ClibPDF - www.fastio.com

212 can remain in an airborne flight path for a period of time. In this manner, the projectile 200 enables military personnel to deliver a camera or a listening device over an enemy territory for surveillance purposes over a significant amount of distance with minimal risk to the military personnel.

Although various embodiments of the invention have been shown and described, they are not meant to be limiting. Those of skill in the art may recognize various modifications to these embodiments, which modifications are meant to be covered by the spirit and scope of the appended claims.

What is claimed is:

1. A rifle muzzle-launched payload delivering projectile comprising:

(a) a launch tube defining an interior cavity, and having an opening at one end with an inner diameter sized to fit over the end of a muzzle of a rifle;

(b) a bullet trap fixedly located in said launch tube cavity opposite from the launch tube opening, said bullet trap adapted for safely capturing a bullet fired from said muzzle;

(c) a payload assembly mounted on said launch tube opposite from said opening end, said payload assembly further configured for safely releasing a payload associated therewith in a controlled manner during delivery in absence of shrapnel formation or fragmentation, and wherein said payload assembly further comprises:

(i) a casing having a distal end and a proximal end, said casing defining a chamber adapted for retaining an aerosol composition;

(ii) a propellant housed in a reservoir in said casing for generating an expandable gas into said chamber upon ignition thereof;

(iii) a primer for igniting said propellant; and

(iv) a frangible portion of said casing in contact with the aerosol composition, said frangible casing portion adapted for safely rupturing in a controlled manner under pressure generated by said propellant after ignition, whereby an aerosol cloud is expelled and released into the atmosphere therefrom, and

(d) a diffuser plate for partitioning said propellant reservoir at the proximal end in said chamber from the aerosol composition, said diffuser plate adapted for regulating gas flow from the reservoir into the chamber containing the aerosol composition; and

(e) said frangible casing portion extends along the surface of the distal end of said casing in contact with the aerosol composition for end expulsion of said aerosol composition.

2. The projectile of claim 1, wherein the payload is selected from the group consisting of an aerosol composition, electronic devices, unmanned aerial vehicles, flash-bang munition; sting balls, concussion grenades, and explosive devices.

3. The projectile of claim 1, wherein the launch tube further comprises a plurality of tail fins extending radially therefrom in a spaced-apart manner proximate to the launch tube opening for providing aerodynamic stability to the projectile.

4. The projectile of claim 1, wherein the aerosol composition is further selected from the group consisting of smoke, crowd control materials, obscurants, marking materials, dyes and inks, chaffs and flakes.

5. The projectile of claim 1, wherein said payload assembly is adapted to detach from said launch tube in mid-flight.

6. The projectile of claim 1, wherein said payload assembly is further adapted for air-borne flight.

7. The projectile of claim 1, further comprising a time-delay fuse for activating said primer at a point in time after launch.

8. The projectile of claim 7, further comprising a pyrotechnic time-delay column located between the primer and the propellant for delay in the initiation of the propellant.

9. The projectile of claim 1, wherein the aerosol composition is contained in a flexible membrane pouch for dissemination of a liquid-based aerosol.

10. The projectile of claim 1, wherein the propellant is selected from the group consisting of single-base propellants, double-base propellants, triple-base propellants, composite propellants, and ball propellants.

11. The projectile of claim 1, wherein the bullet trap further comprises:

a bullet opening in coaxial alignment with the launch tube opening, for permitting the bullet fired from said rifle to pass therethrough;

a plug with an interior cavity opening rearward in communication with the bullet opening, said plug being configured for absorbing the penetrating energy of said bullet to mitigate the peak impact acceleration of said bullet; and

an anvil in contact with a forward portion of said plug, said anvil adapted for retaining the hard component of said bullet and prevent further penetration of said bullet.

* * * * *

ClibPDF - www.fastio.com