US006766744B1

(12) **United States Patent**
Song et al.

(10) **Patent No.: US 6,766,744 B1**
(45) **Date of Patent: Jul. 27, 2004**

(54) **INCENDIARY DEVICE**

(75) Inventors: **Eugene Song**, Ellicott City, MD (US); **Gene V. Tracy**, Jarrettsville, MD (US)

(73) Assignee: **The United States of America as represented by the Secretary of the Army**, Washington, DC (US)

(*) Notice: Subject to any disclaimer, the term of this patent is extended or adjusted under 35 U.S.C. 154(b) by 0 days.

(21) Appl. No.: **10/341,924**

(22) Filed: **Jan. 14, 2003**

(51) **Int. Cl.**[7] **F42B 12/44**

(52) **U.S. Cl.** **102/364**; 102/311; 89/1.13; 86/50

(58) **Field of Search** 102/282, 283, 102/284, 285, 307, 310, 311, 320, 365, 367, 364, 478, 482; 89/1.13; 86/50

(56) **References Cited**

U.S. PATENT DOCUMENTS

4,084,078 A * 4/1978 Schroeder 219/121.36
5,271,332 A * 12/1993 Guirguis 102/476
5,698,812 A * 12/1997 Song 102/364

FOREIGN PATENT DOCUMENTS

IT 434632 * 4/1948 ..... 102/364

* cited by examiner

Primary Examiner—Michael J. Carone
Assistant Examiner—Gabriel S. Sukman
(74) *Attorney, Agent, or Firm*—Ulysses John Biffoni

(57) **ABSTRACT**

The various embodiments provide an incendiary device utilizing a multiple hollow core-burner technique that facilitates producing large diameter cuts through steel targets. To facilitate this result, the various embodiments incorporate a multiple-core burning design with multiple orifices at the base for directing multiple jets of molten reaction product at the target. The various embodiments further incorporate an optional holding device as a means for locking the device onto a target. Devices in accordance with the invention having a base diameter of 2.312" have been shown to be capable of producing an approximately 2" diameter hole through ¼ inch thick steel plate using a 275 g thermite charge within a container three-quarters the size of a standard AN-M14 Thermite Grenade package.

15 Claims, 4 Drawing Sheets

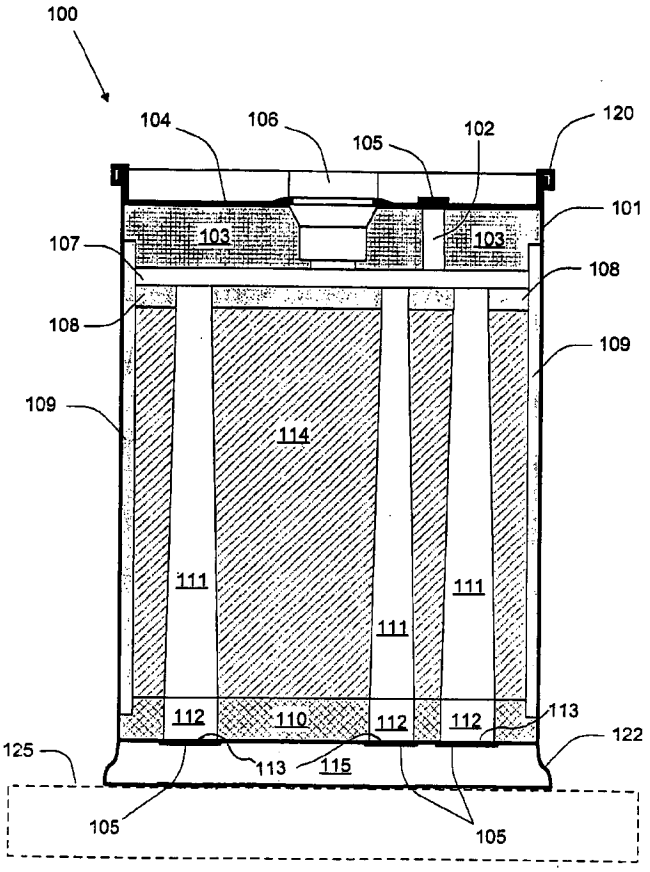

ClibPDF - www.fastio.com

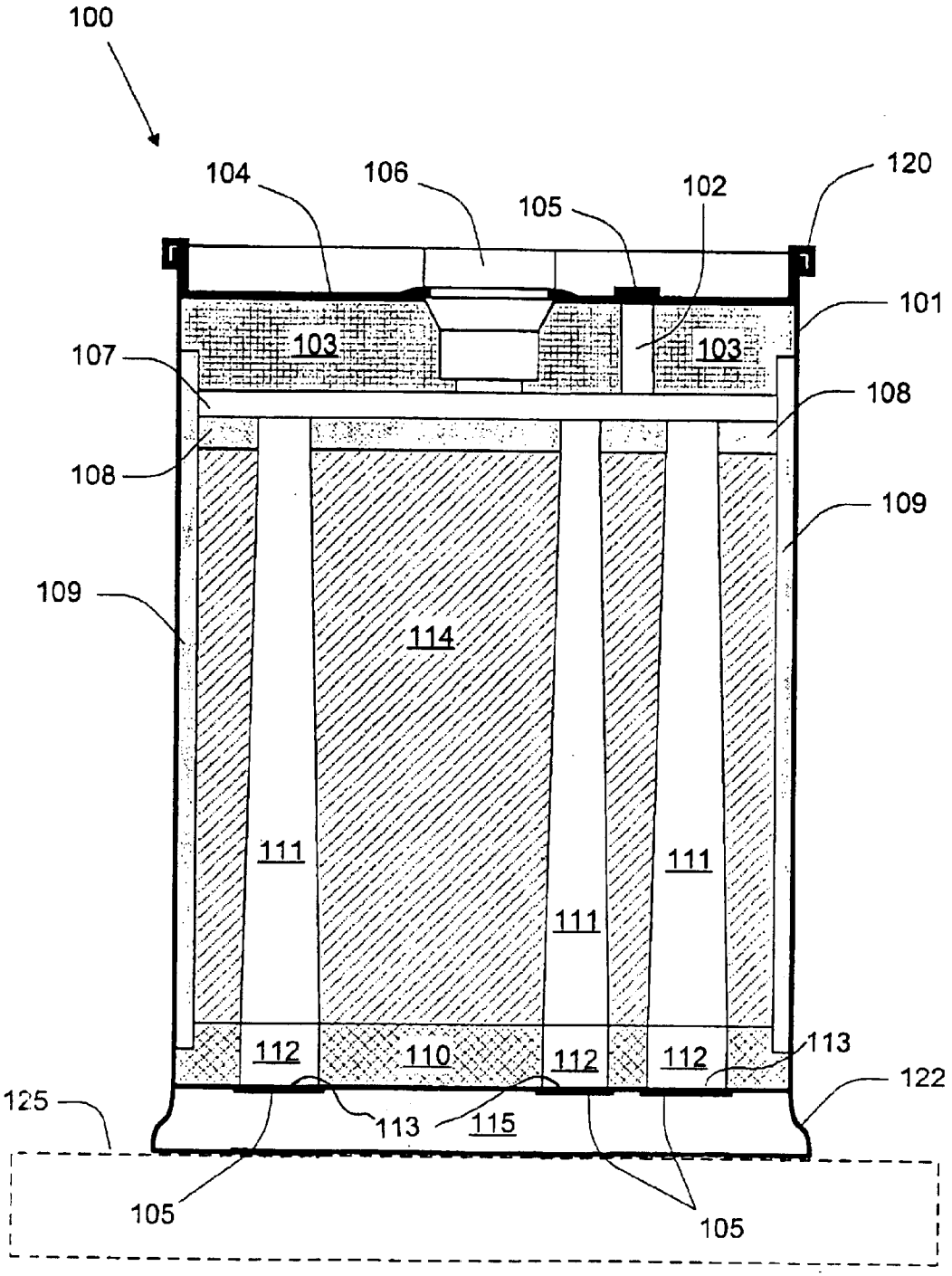

Fig. 1A

ClibPDF - www.fastio.com

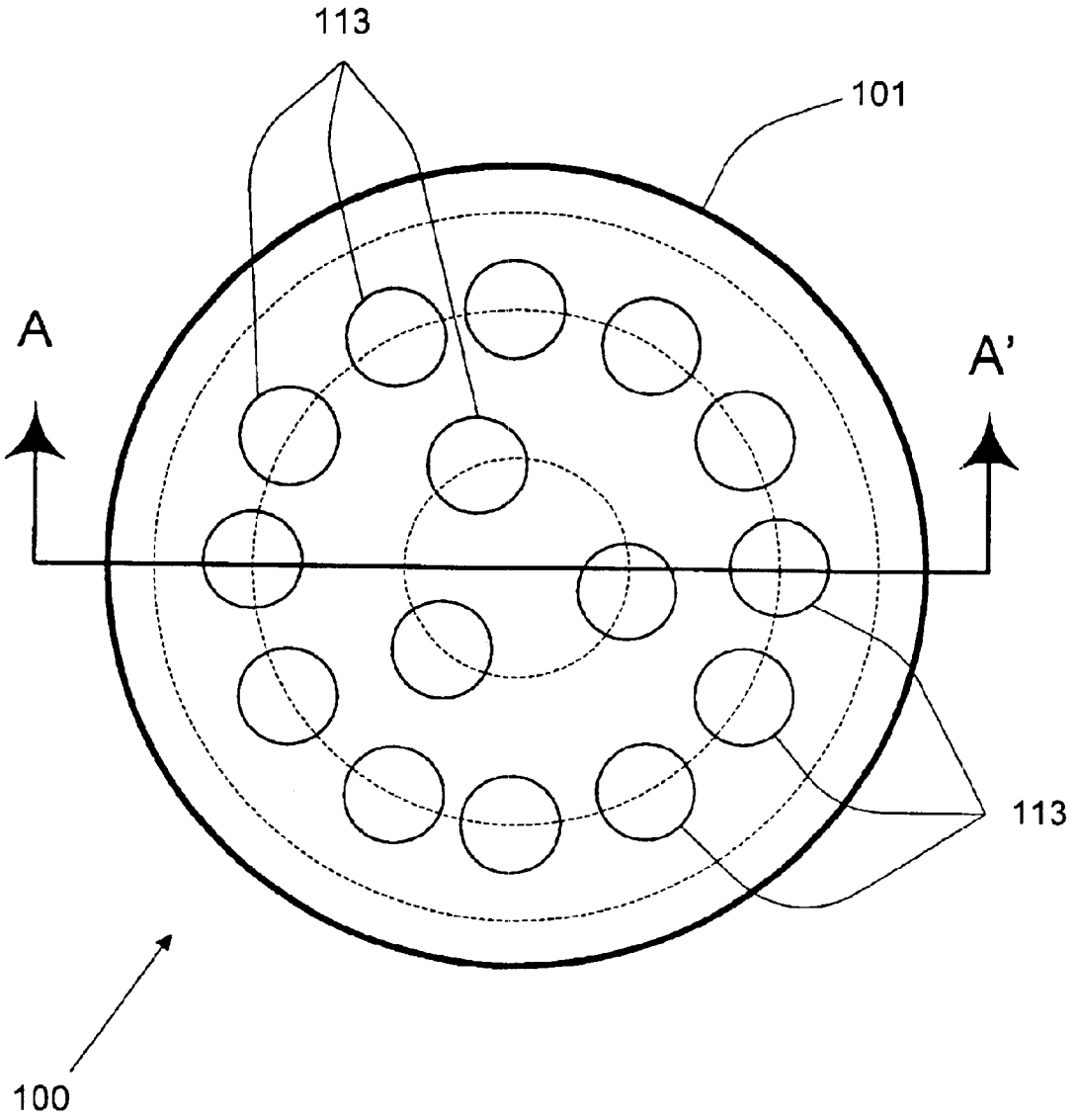

Fig. 1B

ClibPDF - www.fastio.com

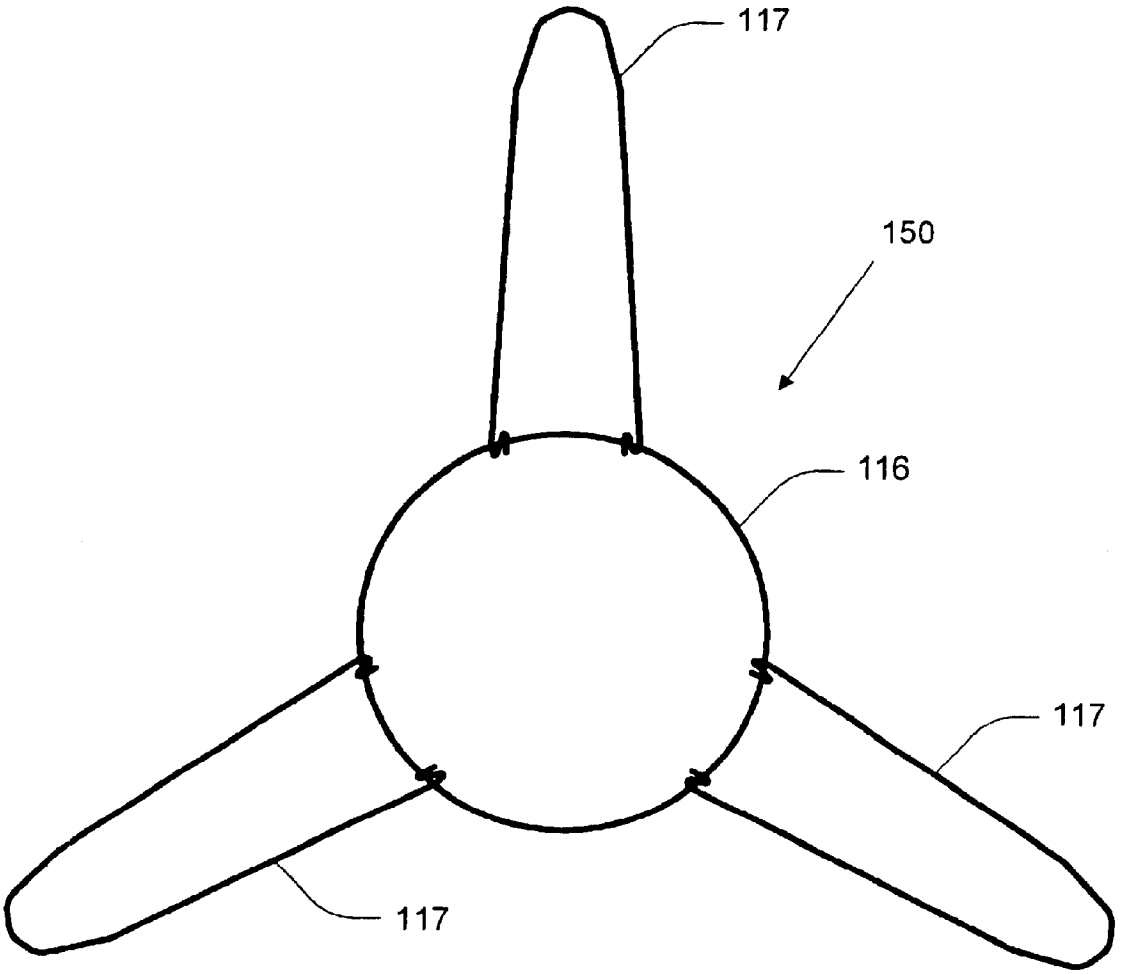

Fig. 2

ClibPDF - www.fastio.com

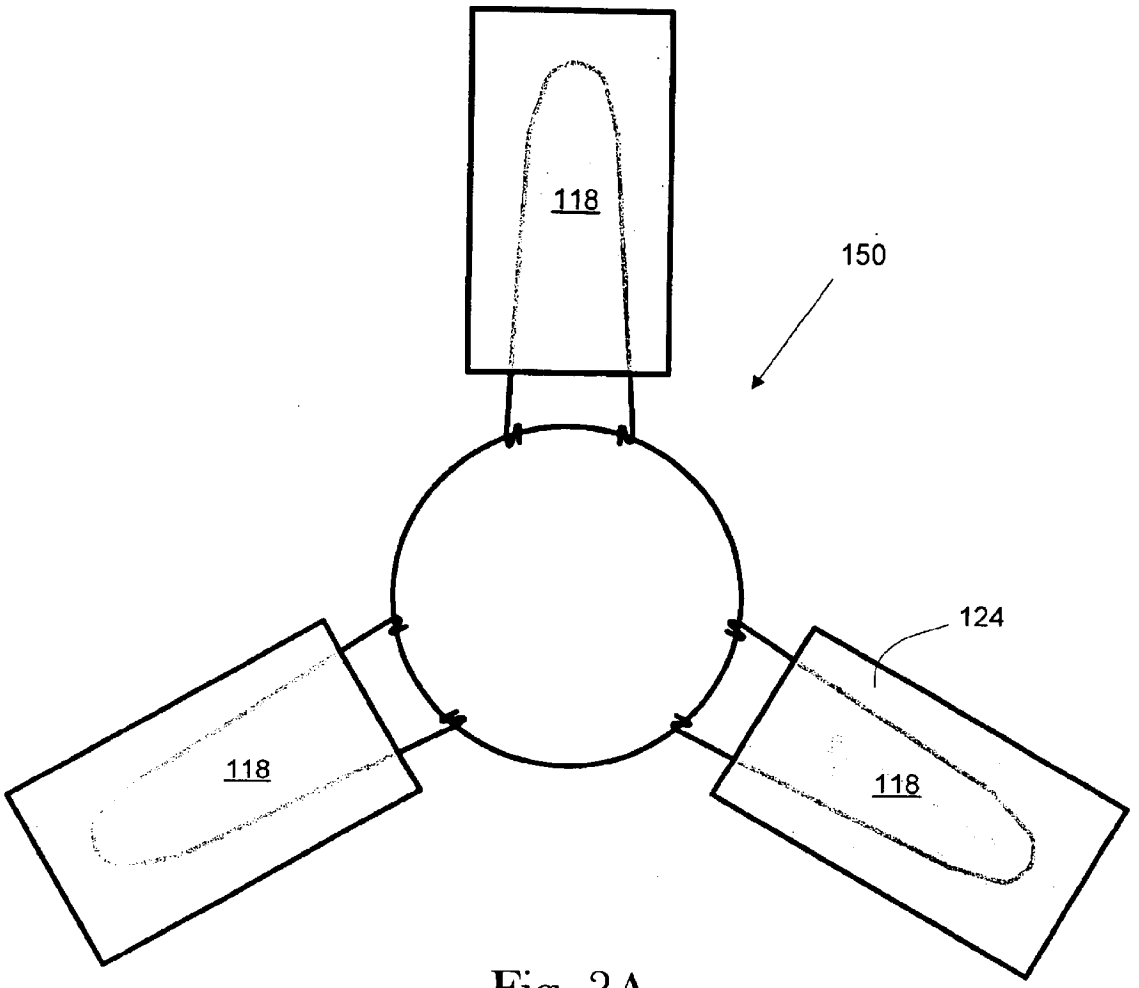

Fig. 3A

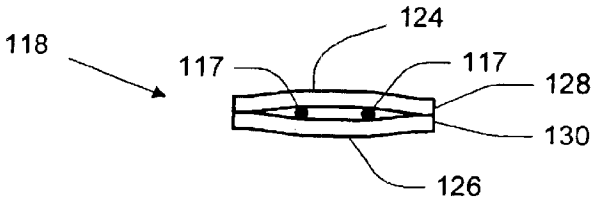

Fig. 3B

ClibPDF - www.fastio.com

INCENDIARY DEVICE

GOVERNMENTAL INTEREST

The invention described herein may be manufactured, used and licensed by or for the U.S. Government.

FIELD OF THE INVENTION

The present invention relates generally to incendiary devices, and more particularly, to incendiary devices for producing controlled-diameter holes in metallic targets.

BACKGROUND

In the disposal of unserviceable explosive ordnances, incendiary devices are often used to burn through the ordnance casing and to ignite or otherwise destroy the ordnance payload. Thermite devices are often used for this purpose. Thermite devices are also used for unconventional warfare activities. Examples include the destruction of machinery or metallic structures, or the destruction of biological agents or precursors.

Destruction of metallic targets can be accomplished by cutting a hole through the casing steel and fusing the gears, pistons, and shaft with a stream of molten iron at 4500° F. It has unlimited uses for attacking and destroying transformers, generators, electric motors, engine blocks, gun barrels, breech blocks, and mines. Storage tanks or drums can be cut through, causing the contents to flow out. If the liquid is flammable a fire and deflagration will result.

Destruction of biological agent and/or its precursor can be accomplished with a minimum collateral release by melting through a steel target (such as fermentation equipment, production equipment, storage drum, or warhead) to render the target unusable to an enemy and destroying the fill material by heating and incendiary action.

Thermite, one of the most common pyrotechnic incendiary agents, is essentially a mixture of powdered ferric oxide and powdered or granular aluminum. When raised to its ignition temperature, an intense reaction occurs whereby the oxygen in the ferric oxide is transferred to the aluminum, producing molten iron, aluminum oxide, and releasing approximately 750 kilocalories per gram. The reaction proceeds as follows:

$$8Al+3Fe_3O_4 \rightarrow 4Al_2O_3+9Fe$$

This exothermic reaction may produce a temperature of about 4500° F. under favorable conditions. The white-hot molten iron and slag can itself prolong and extend the heating and incendiary action.

Other types of thermites containing the oxides of other metals in place of iron oxide are known: manganese thermite ($4Al+3MnO_2$), chromium thermite ($2Al+Cr_2O_3$), and others. Iron thermite ($8Al+3Fe_3O_4$) has proved to be the most effective in incendiary composition for destruction of steel targets because superheated liquid products are formed by the reaction. These molten products affect a high rate of conductive heat transfer to the steel target and, therefore, cause destruction of the target.

However, because of the great difficulty in igniting thermite and the almost complete absence of gaseous reaction products, which causes flameless burning and a small radius of action of the hot thermite, iron-thermite is typically not used alone as an incendiary mixture. It is used in multi-component thermite-incendiary compositions, in which another oxidizer and binder are included, together with

thermite. Thermate-TH3, a mixture of thermite and pyrotechnic additives, was found to be superior to thermites and was adapted for use in incendiary hand grenades. Its composition by weight is generally thermite 68.7%, barium nitrate 29.0%, sulfur 2.0% and binder 0.3%. Addition of barium nitrate to thermite increases its thermal effect, creates flame in burning and reduces the ignition temperature.

Previous efforts involving the use of pyrotechnic thermite grenades involved either the welding of two bars or of creating a pile of molten iron slag. Crude and inexpensive pyrotechnic thermite compositions were used to weld railroad rails together without the need for gas torches.

The military application of this technology resulted in the development of the AN-M14 Thermite Grenade circa 1940. It contains approximately 680 g of thermate-TH3 which releases approximately 795 kilocalories per gram of uncontrolled energy through the thin walls of its sheet metal body. This energy however, being undirected, is highly inefficient and insufficient to produce reasonable penetration levels. This M14 grenade would penetrate a ⅛" of mild steel and was used to disable military equipment by placing a large puddle of molten iron slag within a critical part of the item to be disabled.

Current DOD Explosive Ordinance Disposal (EOD) training school identifies the use of the standard AN-M14 incendiary grenade to render disposal of certain explosive ordinances. Unfortunately, the current EOD procedure requires several grenades, as many as 10 grenades, to achieve the desired result and the effect of the grenades in certain applications offers inconsistent effectiveness. Its configuration does not allow sufficient penetration.

A device with greater penetration capabilities is the "Thermite Destructive Device," U.S. Pat. No. 5,698,812 issued Dec. 16, 1997 to Eugene Song. This device was designed to create a forceful jet of molten iron through an opening at the bottom of the containing vessel. One grenade containing approximately 350 g of thermate-TH3 charge is capable of burning through a sheet of 1-inch thick steel plate in about 8 second reaction time. The device utilizes a central core-burning configuration to direct the molten products through an orifice at the bottom of the device.

While this design has merit from a penetration standpoint, and a 350 g charge of thermite could penetrate 1-inch thick steel plate, it is still inadequate to produce reasonable hole size levels. It is only capable of burning a ⅞" diameter hole, which is not sufficient enough for the safe disposal of an unexploded munition. A larger sized hole is needed to prevent a buildup of the internal pressure, and to achieve the successful burnout of the filler explosive. Earlier work has indicated that burning a 3" diameter hole through the outer casing will allow the explosive contained in the bomb to burn without transitioning to a detonation.

For the reasons stated above, and for other reasons stated below that will become apparent to those skilled in the art upon reading and understanding the present specification, there is a need in the art for alternative incendiary devices that are adapted for burning controlled-diameter holes through metallic targets.

SUMMARY

The various embodiments provide an incendiary device utilizing a multiple core-burner technique that facilitates producing large diameter cuts through steel targets. To facilitate this result, the various embodiments incorporate a multiple-core burning design with multiple orifices at the base for directing multiple jets of molten reaction product at the target. The various embodiments further incorporate an

ClibPDF - www.fastio.com

optional holding device as a means for locking the device onto a target. Devices in accordance with the invention having a base diameter of 2.312" have been shown to be capable of producing an approximately 2" diameter hole through ¼ inch thick steel plate using a 275 g thermite charge within a container three-quarters the size of a standard AN-M14 Thermite Grenade package.

For one embodiment, the invention provides an incendiary device. The device includes an insulated housing, a vented plug at a top of the housing and a nozzle plate at a bottom of the housing. The nozzle plate includes a plurality of orifices. The device further includes a thermite charge contained in the housing between the vented plug and the nozzle plate. The thermite charge includes a plurality of cores extending a length of the thermite charge between the vented plug and the nozzle plate. Each core is aligned with an orifice of the nozzle plate.

For another embodiment, the invention provides an incendiary device. The device includes a housing having a top and a bottom, a vented plug at the top of the housing, a lid at the top of the housing covering the vented plug, and a nozzle plate at the bottom of the housing. The vented plug includes an adapter for a remote initiation fuse assembly and at least one vent. The lid has a hole corresponding to each vent of the vented plug. The nozzle plate includes a plurality of orifices. The device further includes a compacted thermite charge between the nozzle plate and the vented plug, the thermite charge having a plurality of hollow cores corresponding to the plurality of orifices of the nozzle plate, and a starter material on top of the thermite charge interposed between the vented plug and the thermite charge. An air space is interposed between the starter material and the vented plug. The device still further includes an insulation liner extending from the vented plug to the nozzle plate and interposed between the thermite charge and the housing and a standoff extending below the nozzle plate. The standoff comprises a lip along the circumference or outer edge of the housing only, so that the nozzle plate is spaced apart from the target surface being penetrated. The device still, further includes impermeable seals covering each vent of the vented plug and each orifice of the nozzle plate.

For yet another embodiment, the invention provides an incendiary device having a thermite charge for burning a hole in a target surface. The incendiary device includes means for igniting the thermite charge, thereby producing molten reaction products, and means for producing a plurality of jets of the molten reaction products in an arrangement approximating a shape of a desired burn in the target surface.

The invention further includes other apparatus of varying scope.

DESCRIPTION OF THE DRAWINGS

FIG. **1**A is cross-sectional view of an incendiary device in accordance with an embodiment of the invention.

FIG. **1**B is a bottom view of the incendiary device of FIG. **1**A.

FIG. **2** is a top view of a harness for use with the incendiary device of FIGS. **1**A–**1**B.

FIG. **3**A is a top view of the harness of FIG. **2** with added hold-downs.

FIG. **3**B is cross-sectional view of a hold-down of FIG. **2**

DETAILED DESCRIPTION

In the following detailed description of the present embodiments, reference is made to the accompanying drawings that form a part hereof, and in which is shown by way of illustration specific embodiments in which the invention may be practiced. These embodiments are described in sufficient detail to enable those skilled in the art to practice the invention, and it is to be understood that other embodiments may be utilized and that process, electrical or mechanical changes may be made without departing from the scope of the present invention. The following detailed description is, therefore, not to be taken in a limiting sense, and the scope of the present invention is defined only by the appended claims and equivalents thereof.

FIGS. **1**A–**1**B depict an incendiary device **100** in accordance with an embodiment of the invention. FIG. **1**A is a cross-sectional view of the incendiary device **100** taken along a line A–A' of FIG. **1**B, a bottom view of the incendiary device **100**. Referring to FIG. **1**A, the device body comprises a housing **101** and a lid **104** which may be constructed of any suitable material able to withstand the effects of rough handling, e.g., sheet metal or plastic. The bottom of the housing **101** may contain a circumferential skirt **122** having a diameter larger than a diameter of a body portion of the housing **101** containing the thermite charge **114**.

The housing **101** has a plurality of exit holes **113** in the bottom, and contains an insulation liner **109** and a nozzle plate **110**, made of graphite or other refractory material capable of withstanding the reaction temperature of the specific thermite selected. The nozzle plate **110** has a plurality of orifices **112** in alignment with the matching exit holes **113** at the bottom. A thermite charge **114**, suitably of the Fe_3O_4 and Al type described above, will be consolidated into the insulated housing **101** such that multiple hollow cores **111** extend downward along the entire length of the charge through the matching orifices **112** at the bottom. Illustrative but without limitation, the consolidation may be done in several increments with the consolidation pressure in the range of 3000 to 4000 psig, which will assure a uniform and compact thermite charge. For one embodiment, the hollow cores **111** have a conically-shaped channel having base and top diameter of ½-inch and ⅜-inch, respectively. However, the hollow cores **111** may also be substantially cylindrical or have tapers of varying degree. A standoff **115** at the bottom of the device insures a separation between the orifices **112** and the material under attack. The standoff **115** comprises a lip along the circumference or outer edge of the bottom of the device only, so that the exit holes **113** are separated from the target surface **125** being penetrated.

A starter material **108** is pressed on top of the thermite charge **114**. The starter material **108** may be any material that is readily ignitable upon application of flame, or lighted fuse, and has sufficient thermal output to reliably ignite the thermite charge **114**. One example of a starter material includes a mixture of Potassium Nitrate (66 parts by weight), Titanium (11 parts by weight), Aluminum (8 parts by weight), Silicon (6 parts by weight), Sulfur (2 parts by weight), Charcoal (5 parts by weight), and Polyacrylic rubber (2 parts by weight).

The vented plug **103**, made of graphite or other refractory material capable of withstanding the reaction temperature of the specific thermite selected, having one or more vent holes **102**, rests over the top of the insulation liner **109**. The vented plug **103** acts as a baffle for the exit of molten product materials and also acts as a radiation shield, thus helping retain the heat produced. Manipulation of vented plug **103** and orifice **112** designs make it possible to control the pressure of the jets of molten products of reaction through the orifices **112** at the bottom. The lid **104** has one or more

ClibPDF - www.fastio.com

holes in alignment with vent holes **102** and is tightly closed by any conventional means, e.g., crimping. The vent holes **102** in the top and the exit hole **113** in the bottom are sealed from outside by seals **105**, e.g., a thin metal adhesive disc of foil **105**, preferably aluminum, or other impermeable membrane. The seals **105** serve to inhibit migration of moisture into the body **101**.

The multiple hollow cores **111** formed in the compacted thermite charge **114** allow the reaction front to progress both radially outward and axially downward through the charge **114**, thus permitting the molten mass to be pushed out of the orifices **112** at the base immediately upon ignition until completion of the reaction. This would result in multiple high velocity jets exiting from the orifices **112**, thus facilitating a large diameter circular cut of a steel plate. In addition, the cores **111** increase the burning surface areas and consequently the burn rate. A small air space **107** above the thermite charge **114**, suitably about 0.5-inch in height, along with the vented plug **103** provide some restriction of the expanding gases within the device which results in enough pressure increase to aid in jetting of the molten reaction products through the orifices **112**. The number and size of the vents **102** can be adjusted to provide a desired backpressure, thereby controlling the exit pressure of the molten reaction products from the orifices **112**.

While the orifices **112** and holes **113** are arranged in substantially concentric rings in the embodiment depicted in FIGS. **1A–1B**, other arrangements are possible. For example, the orifices **112** and holes **113** may be arranged in oval or polygonal shapes roughly approximating the shape of the desired burn to be made in the target surface **125**. Similarly, the arrangement of orifices **112** and holes **113** depicted in FIGS. **1A–1B** may include more or less concentric rings for increasing or decreasing the area of burn of the target surface **125**.

For safety considerations, the explosive ordnance disposal procedures must generally be performed remotely. A remote initiation fuse assembly is fitted into the adapter **106** in the top of the device. The remote fuse (not shown) may be any type that is capable of igniting the starter materials **108** which in turn ignite the thermite charge **114**. The fuse should desirably be an electric or timed fuse.

For one example embodiment, the incendiary device is a cylindrical container filled with approximately 0.6 lb of incendiary mixture. The body is a thin sheet metal cylinder approximately 2.3 inches in diameter by 3.5 inches high, with eight exit holes in the bottom and three vent holes in the top. The device body is equipped with a pre-formed graphite insulation liner with an orifice plate at the base and vent plate at the top. The incendiary fill is consolidated into the insulated body with eight formed hollow cores. The top of the fill and the multiple hollow cores are covered with a starter mixture. The holes in the top and bottom of the device are covered with an adhesive moisture barrier. The device includes 8 hollow cores having a nominal diameter of 7/16 inches, three vent holes having a nominal diameter of 0.2344 inches, and a standoff distance of approximately 0.5 inches. Such a device has been shown to be capable of producing a hole of approximately 2 inches in diameter through a ¼-inch thick steel plate.

For another example embodiment, the incendiary device is a cylindrical container filled with approximately 3.5 lb of incendiary mixture. The body is a thin sheet metal cylinder approximately 4 inches in diameter by 6.25 inches high, with twelve exit holes in the bottom and three vent holes in the top. The device body is equipped with a pre-formed graphite insulation liner with an orifice plate at the base and vent plate at the top. The incendiary fill is consolidated into the insulated body with twelve formed hollow cores. The top of the fill and the multiple hollow cores are covered with a starter mixture. The holes in the top and bottom of the device are covered with an adhesive moisture barrier. The device includes 12 hollow cores having a nominal diameter of ½ inches, three vent holes having a nominal diameter of ½ inches, and a standoff distance of approximately ¾ inches. Such a device has been shown to be capable of producing a hole of approximately 3.5 inches in diameter through a ½-inch thick steel plate.

FIG. **2** is a top view of a harness **150** for use with the incendiary device of FIGS. **1A–1B**. The harness **150** may be used to facilitate attachment of the incendiary device **100** to a target surface **125**. The harness **150** includes a ring **116** having a diameter large enough to fit over the housing **101** of the incendiary device **100** yet having a diameter smaller than the circumferential skirt **122** of the housing **101**. One or more hands or other appendages **117** may be attached to and extend from the ring **116** for use in attaching the harness **150** to the target surface **125**. In a simple construction, the ring **116** may be a ring of wire. The hands **117** may include a wire loop coiled around the ring **116** for attachment.

FIG. **3A** is a top view of a harness **150** having hold-downs **118** attached to the hands **117**. The hold-downs **118** are generally adapted to the type of surface to which the incendiary device **100** is to be attached. For example, if the target surface **125** is a ferrous metal, the hold-downs **118** could be magnets. However, it is found that adhesive hold-downs **118** are probably more universally suitable for a variety of surfaces.

FIG. **3B** is a cross-sectional view of a hold-down **118** formed of two pieces of double-sided foam tape, e.g., 3M™ 4930 VHB™ Double Coated Acrylic Foam Tape, available from 3M, St. Paul, Minn., USA. Such tapes contain a pressure-sensitive adhesive on opposing surfaces of a foam carrier. Each surface of these foam tapes contains a removable liner.

A first piece of foam tape **128** can maintain its liner on an outer surface **124**. A second piece of foam tape **130** can maintain its liner on an outer surface **126** until ready for attachment to a target surface **125**. The remaining surfaces of the first piece of foam tape **128** and the second piece of foam tape **130** may be placed around an arm **117** and attached to each other by their exposed adhesive surfaces. When ready to attach the harness **150** to a target surface, the liner may be removed from the surface **126**, thereby exposing its adhesive layer.

CONCLUSION

The various embodiments provide an incendiary device utilizing a multiple core-burner technique that facilitates producing large diameter cuts through steel targets. To facilitate this result, the various embodiments incorporate a multiple-core burning design with multiple orifices at the base for directing multiple jets of molten reaction product at the target. The various embodiments further incorporate an optional holding device as a means for locking the device onto the target.

Devices in accordance with the invention having a base diameter of 2.312" have been shown to be capable of producing an approximately 2" diameter hole through ¼ inch thick steel plate using a 275 g thermite charge within a container three-quarters the size of a standard M14 package.

Although specific embodiments have been illustrated and described herein, it will be appreciated by those of ordinary

ClibPDF - www.fastio.com

skill in the art that any arrangement that is calculated to achieve the same purpose may be substituted for the specific embodiments shown. Many adaptations of the invention will be apparent to those of ordinary skill in the art. Accordingly, this application is intended to cover any adaptations or variations of the invention. It is manifestly intended that this invention be limited only by the following claims and equivalents thereof.

What is claimed is:

1. An incendiary device, comprising:

an insulated housing;

a vented plug at a top of said housing;

a nozzle plate at a bottom of said housing and comprising a plurality of orifices; and

a thermite charge contained in said housing between said vented plug and said nozzle plate, wherein said thermite charge further comprises a plurality of hollow cores extending a length of said thermite charge between said vented plug and said nozzle plate, each core aligned with an orifice of said nozzle plate, and wherein said cores are arranged in a plurality of concentric rings.

2. The incendiary device of claim **1**, wherein said thermite charge comprises a thermite composition selected from the group consisting of a manganese thermite, a chromium thermite, and an iron thermite.

3. The incendiary device of claim **2**, wherein said thermite charge further comprises another oxidizer and a binder.

4. The incendiary device of claim **1**, wherein said hollow cores taper outwardly as said cores extend toward their corresponding orifice.

5. The incendiary device of claim **1**, wherein said vented plug and said nozzle plate each comprise a refractory material and said housing is insulated with a refractory material.

6. The incendiary device of claim **5**, wherein said refractory material for at least one of said vented plug, said nozzle plate and said housing insulation is graphite.

7. The incendiary device of claim **1**, further comprising:

a standoff comprising a lip along a circumference or outer edge of a bottom of said housing, providing a separation between said orifices in said nozzle plate and a target surface.

8. The incendiary device of claim **7**, further comprising a harness for attaching the incendiary device to the target surface.

9. The incendiary device of claim **8**, further comprising a circumferential skirt at said standoff, wherein said harness has a ring adapted to fit over said housing and said ring has a diameter less than a diameter of said circumferential skirt.

10. An incendiary device, comprising:

a housing having a top and a bottom;

a vented plug at the top of said housing, said plug having an adapter for a remote initiation fuse assembly and having at least one vent;

a lid at the top of said housing covering said vented plug and having a hole corresponding to each vent of said vented plug;

a nozzle plate at the bottom of said housing, said nozzle plate having a plurality of orifices;

a compacted thermite charge between said nozzle plate and said vented plug, said thermite charge having a plurality of hollow cores corresponding to the plurality of orifices of the nozzle plate, and wherein said cores are arranged in a plurality of substantially concentric rings;

a starter material on top of said thermite charge interposed between said vented plug and said thermite charge;

an air space interposed between said starter material and said vented plug;

an insulation liner extending from said vented plug to said nozzle plate and interposed between said thermite charge and said housing;

a standoff extending below said nozzle plate, said standoff providing a separation between the orifices of said nozzle plate and a target surface; and

impermeable seals covering each vent of said vented plug and each orifice of said nozzle plate.

11. The incendiary device of claim **10**, wherein said hollow cores are conically-shaped channels having a base diameter greater than a top diameter.

12. The incendiary device of claim **11**, wherein said base diameter is approximately ½-inch and said top diameter is approximately ⅜-inch.

13. The incendiary device of claim **11**, wherein said hollow cores are arranged in two concentric rings.

14. An incendiary device for burning a hole in a target surface, said incendiary device comprising:

a thermite charge, wherein said thermite charge further comprises a plurality of hollow cores extending a length of said thermite charge, and wherein said cores are arranged in a plurality of substantially concentric rings;

means for igniting said thermite charge thereby producing molten reaction products; and

means for producing a plurality of jet of said molten reaction products, and wherein said means for producing a plurality of jets of said molten reaction products further comprises means for controlling an exit pressure of said plurality of jets of said molten reaction products.

15. The incendiary device of claim **14**, further comprising means for attaching said incendiary device to said target surface.

* * * * *

ClibPDF - www.fastio.com